produced guide to servicing, overhaul and repairs
31 — ideal for the DIY enthusiast who can carry out major as
jobs.
ks series of Owners Workshop Manuals is the largest in the
ons of copies sold worldwide.

al savings on
ng an Autobook
tep-by-step

ted with
ded' diagrams
tions

- Detailed repair and servicing data
- Fault-diagnosis sections help you identify problems fast
- You can ensure the job gets done properly
- Loads of hints and tips to get peak performance and maximum economy from your Fiat 131
- Contains glossary of terms and alphabetical index
- Wipe-clean protective plastic-laminated cover

Vorkshop Manual is an invaluable accessory — clearly the best book of its kind."
(CEI) MIMI — leading authority on car maintenance and vehicle safety — author of
test'

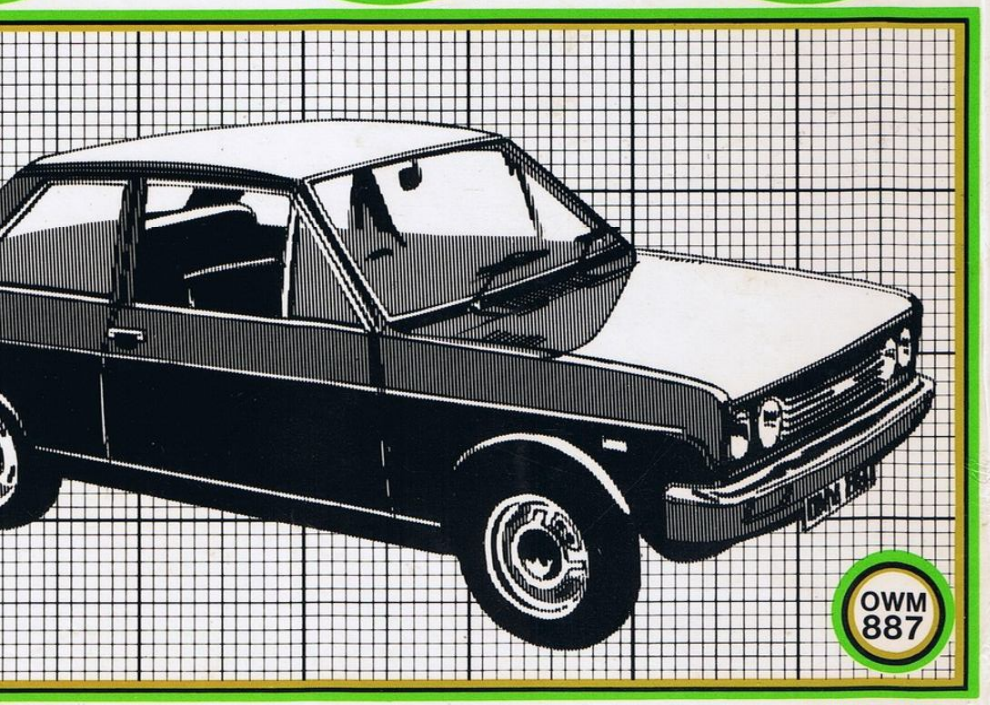

OWM 887

ISBN 0 85146 226 X

Fiat 131 Mirafiori

1975-82

OWM 887

Autobooks

Autobooks

Fiat 131 Mirafiori

Fiat 131 Mirafiori 1300, L, CL,
1600 S, CL, 1800, 2000 Sport
Supermirafiori 1600 TC

1975-82

Owners Workshop

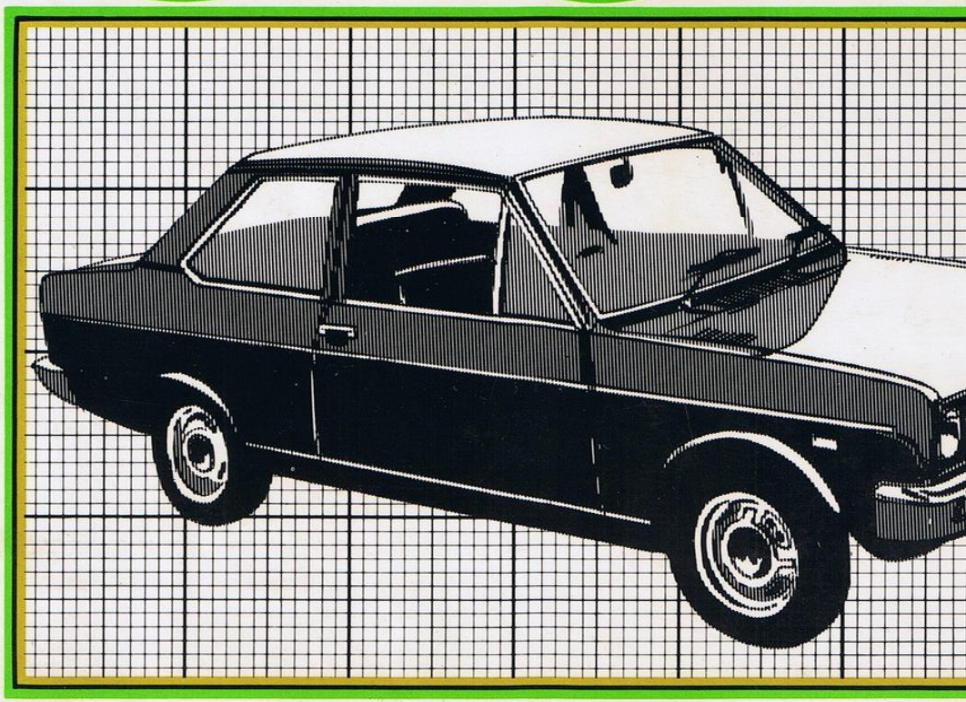

Fiat 131 Mirafiori 1975-82 Autobook

By the Autobooks Team of Writers and Illustrators

Fiat 131 Mirafiori 1300 1975-78
Fiat 131 Mirafiori 1300 L 1978-79
Fiat 131 Mirafiori 1300 CL 1979-82
Fiat 131 Mirafiori 1600 S 1975-78
Fiat 131 Mirafiori 1600 CL 1978-82
Fiat 131 Mirafiori 1800 1975-77
Fiat 131 Mirafiori 2000 Sport 1978-82
Fiat 131 Supermirafiori 1600 TC 1978-82

Autobooks

Autobooks Ltd.
Bradford Road East Ardsley Wakefield West Yorkshire WF3 2JN England

The AUTOBOOK series of Workshop Manuals is the largest in the world and covers the majority of British and Continental motor cars, as well as the majority of Japanese and Australian models.

Whilst every care has been taken to ensure correctness of information it is obviously not possible to guarantee complete freedom from errors or omissions or to accept liability arising from such errors or omissions.

CONTENTS

Introduction		
Chapter 1	The Engine	9
Chapter 2	The Fuel System	33
Chapter 3	The Ignition System	43
Chapter 4	The Cooling System	51
Chapter 5	The Clutch	57
Chapter 6	Manual Transmission	61
Chapter 7	Automatic Transmission	77
Chapter 8	Propeller Shaft, Rear Axle and Rear Suspension	85
Chapter 9	Front Suspension and Hubs	91
Chapter 10	The Steering Gear	99
Chapter 11	The Braking System	105
Chapter 12	The Electrical System	117
Chapter 13	The Bodywork	123
Appendix		131

ISBN 0 85146 226 X

First Edition 1977
Reprinted 1978
Second Edition, fully revised 1980
Reprinted 1982
Third Edition, fully revised 1982

© Autobooks Ltd 1982

All rights reserved. No part of this publication may be reproduced, stored in a retrieval system, or transmitted in any form or by any means, electronic, mechanical, photocopying, recording or otherwise, without the prior permission of Autobooks Ltd.

887

Printed in Brighton England for Autobooks Ltd by G. Beard and Son Ltd
Bound in Hove England for Autobooks Ltd by Seawhite Ltd

D

INTRODUCTION

This do-it-yourself Workshop Manual has been specially written for the owner who wishes to maintain his vehicle in first class condition and to carry out the bulk of his own servicing and repairs. Considerable savings on garage charges can be made, and one can drive in safety and confidence knowing the work has been done properly.

Comprehensive step-by-step instructions and illustrations are given on most dismantling, overhauling and assembling operations. Certain assemblies require the use of expensive special tools, the purchase of which would be unjustified. In these cases information is included but the reader is recommended to hand the unit to the agent for attention.

Throughout the Manual hints and tips are included which will be found invaluable, and there is an easy to follow fault diagnosis at the end of each chapter.

Whilst every care has been taken to ensure correctness of information it is obviously not possible to guarantee complete freedom from errors or omissions or to accept liability arising from such errors or omissions.

Instructions may refer to the righthand or lefthand sides of the vehicle or the components. These are the same as the righthand or lefthand of an observer standing behind the vehicle and looking forward.

CHAPTER 1

THE ENGINE

1 : 1 Description
1 : 2 Removing the engine
1 : 3 Dismantling the engine
1 : 4 Removing and refitting cylinder head
1 : 5 Cylinder head and camshaft servicing
1 : 6 Valve clearance adjustment
1 : 7 Timing belt
1 : 8 Pistons and connecting rods
1 : 9 Crankshaft and bearings
1 : 10 Auxiliary shaft
1 : 11 Cylinder block
1 : 12 The oil pump
1 : 13 The oil filter
1 : 14 Reassembling the engine
1 : 15 Refitting the engine
1 : 16 Fault diagnosis

1 : 1 Description

Engines of two different types and four different sizes are used in the range of cars covered in this manual. On early cars three engines were available of which two, the 1300 and the 1600, had overhead valves operated by pushrods and rockers; the third engine, known as the 1800, had double overhead camshafts to operate the valves. The actual capacities of these three engines were 1297, 1585 and 1756cc respectively.

In 1978, with the introduction of the Supermirafiori range, the 1300 and 1600 engines became available with double overhead camshafts and a third, similar, engine of 1995cc, known as the 2000, was added to the range. On some cars the capacity of the 1297cc engine was increased to 1301cc by raising the bore dimension by 0.1mm: these engines are still referred to as the 1300 although they have a different type number as will be seen by the specifications given in **Technical Data** in the **Appendix**.

Apart from the very obvious differences associated with the cylinder heads and valve operating gear, all the engines are similar in basic design and construction and the descriptions and servicing operations given in this chapter will apply to all engines except where specifically indicated.

The cylinder block is integral with the upper half of the crankcase, the lower half of which is formed by the pressed steel sump. The aluminium pistons are each provided with two compression rings and a single oil control ring.

The five bearing counterbalanced crankshaft is a special steel casting. Crankshaft end thrust is taken by thrust rings at the rear main bearing position. The main and big-end bearings are provided with renewable shell type inserts.

A gear type oil pump draws oil from the sump beneath the engine and supplies it to the system under pressure. A relief valve is fitted to the system to limit the maximum oil pressure when the engine is cold. Pressure oil is fully filtered before being passed to the main oil gallery, from which point the oil is routed to the main and big-end bearings and to the camshaft support bearings. The valve gear is lubricated by oil draining from the valve operating mechanism, the pistons and cylinders being lubricated directly by supply jets and indirectly by oil splash from the big-end bearings. Oil passages in the crankcase supply oil to the camshaft on both pushrod engines or to the auxiliary shaft bearings on overhead camshaft versions.

On the pushrod engines the side camshaft, driven by toothed belt from the crankshaft pulley, operates the overhead valves by means of tappets, pushrods and rockers. The rockers are provided with threaded adjusters to allow valve clearances to be correctly set. The camshaft is provided with a gear to drive the distributor and oil pump and an eccentric to operate the fuel pump. A cross-section through a typical 1300 or 1600 pushrod engine is shown in **FIG 1 : 1**.

OHC models are provided with twin overhead camshafts, each camshaft being mounted in a separate housing bolted to the top of the cylinder head. The camshafts are driven by a toothed belt from the crankshaft

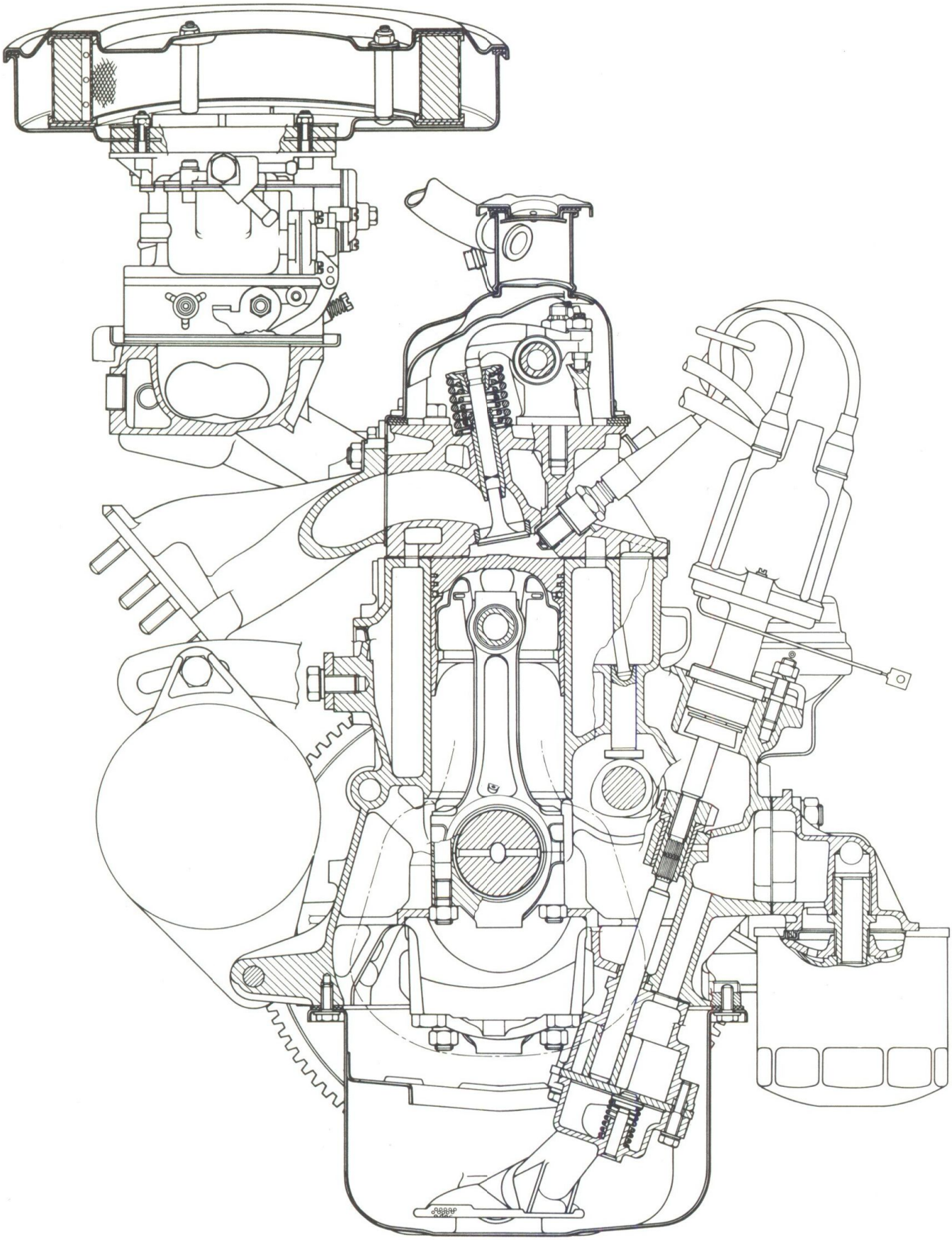

FIG 1 : 1 Cross-section through typical 1300 or 1600 pushrod engine

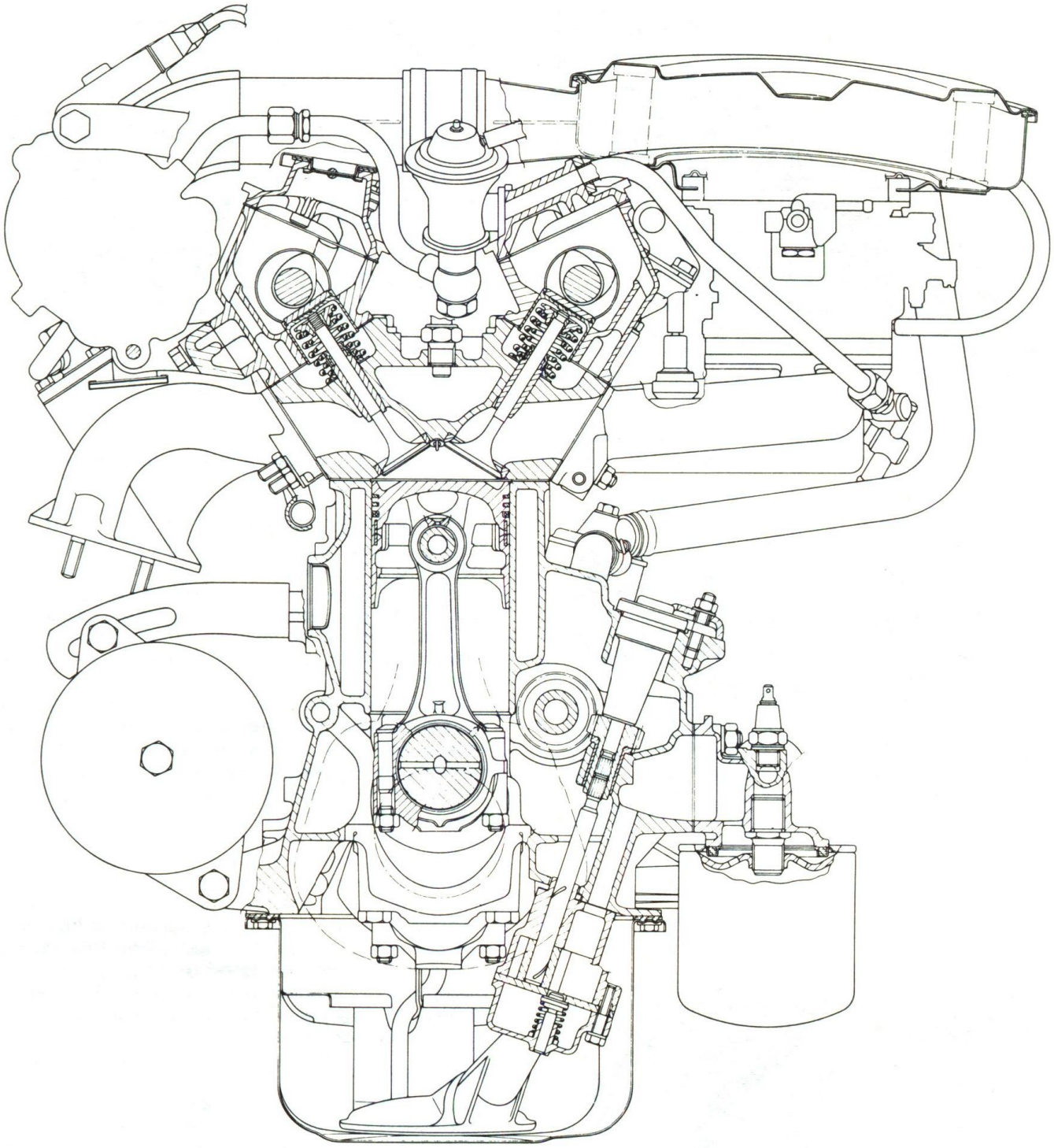

FIG 1 : 2 Cross-section through typical overhead camshaft engine

sprocket. An auxiliary shaft and sprocket, driven by the same belt, is provided with a gear to drive the distributor and oil pump and an eccentric to operate the fuel pump. Valve clearance adjustment is carried out by the selective fitting of shims to the valve tappets. A section through an OHC engine unit is shown in **FIG 1 : 2**.

1 : 2 Removing the engine

The normal operations of decarbonising and servicing the cylinder head can be carried out without the need for engine removal, as can the majority of engine servicing procedures. A major overhaul, however, can only be satisfactorily carried out with the engine removed and transferred to the bench. For some overhaul work, certain special tools are essential and the owner would be well advised to check on the availability of these factory tools or suitable substitutes before tackling the items involved. If the operator is not a skilled automobile engineer, it is suggested that he will find much useful information in **Hints on Maintenance and Overhaul**

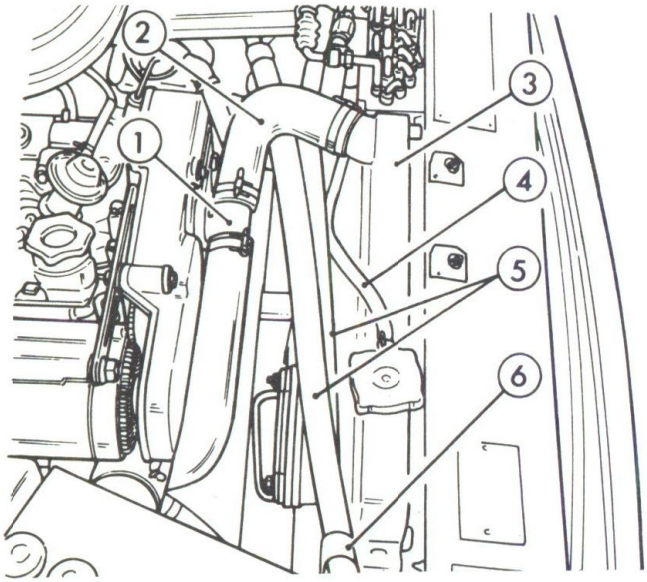

FIG 1:7 Disconnecting water and air conditioning hoses

Disconnect the wiring from the starter motor and alternator and from all connections on the engine unit, noting the locations of the wires for correct refitting.

Attach the special sling A.60590 or a suitable substitute to the engine, then carefully raise the engine until it is clear of the engine compartment and transfer to the bench.

Removal, overhead camshaft engine :

Disconnect the battery earth cable. Drain the engine oil. Refer to **Chapter 4** and drain the cooling system. Refer to **Chapter 13** and remove the bonnet. Remove the transmission as described in **Chapter 6** or **Chapter 7**. Refer to **Chapter 12** and remove the starter motor.

Refer to **FIG 1:5**. Disconnect the wiring from oil pressure sender unit 7 and from the thermo switch 1 at inlet manifold 8. Remove nut 6 to release earth strap 2 and remove nut and washers 3 securing the mounting 4 to bracket 5.

Refer to **FIG 1:6**. Remove heat shield 4 from alternator 5, then disconnect the alternator wiring. Remove nut and washers 2 to release mounting 1 from bracket 3.

Refer to **FIG 1:7**. Disconnect water hose 2 from union 1 and disconnect the water hose from the thermostat. On models fitted with air conditioning (refrigeration) systems, the system hoses must now be disconnected. **Note the warning given earlier in this section.** With the system correctly discharged, disconnect hoses 5 from compressor and drier, then remove the nut securing clamp 6 to the radiator. Disconnect the two water hoses to the carburetter automatic choke.

Disconnect the wires from the thermo switch and cooling fan. Remove two nuts and washers securing the radiator 3, then remove the radiator from the engine compartment.

Refer to **Chapter 2** and remove the air cleaner assembly. Refer to **FIG 1:8**. Disconnect vacuum hoses from fitting 5 on inlet manifold. Disconnect wires 4 and 7 from carburetter and wire 12 from coil. Disconnect fuel inlet hose 9 and return hose 8 from carburetter. Disconnect vacuum hose 6, carburetter vent hose 11 and fast-idle vacuum hose 10 from carburetter. Disconnect

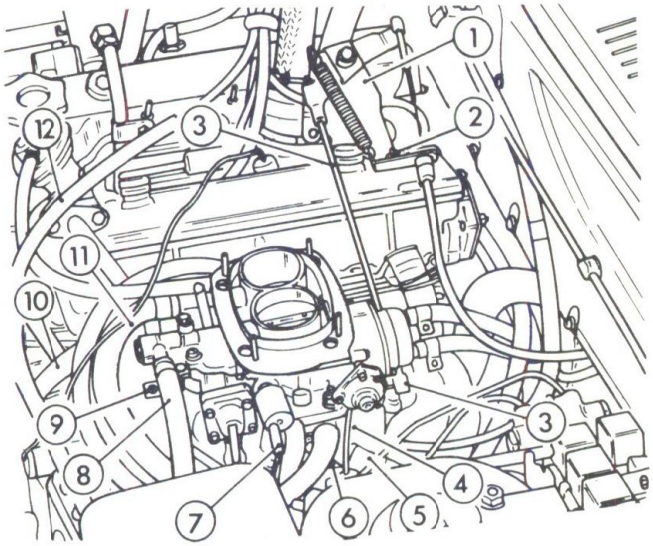

FIG 1:8 Items to be disconnected before engine removal, OHC models

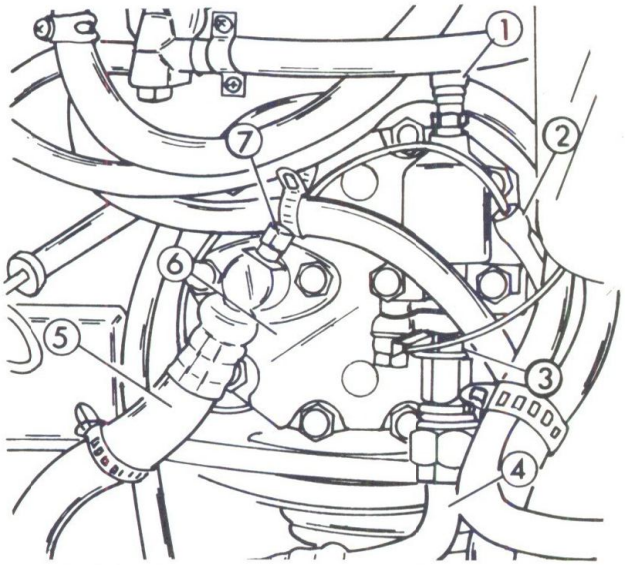

FIG 1:9 Compressor hoses and bleed fittings

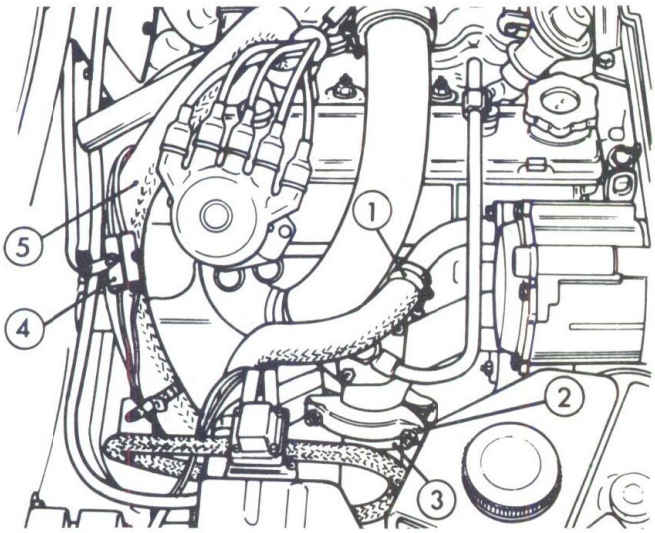

FIG 1:10 Exhaust pipe, air hose and wiring connections

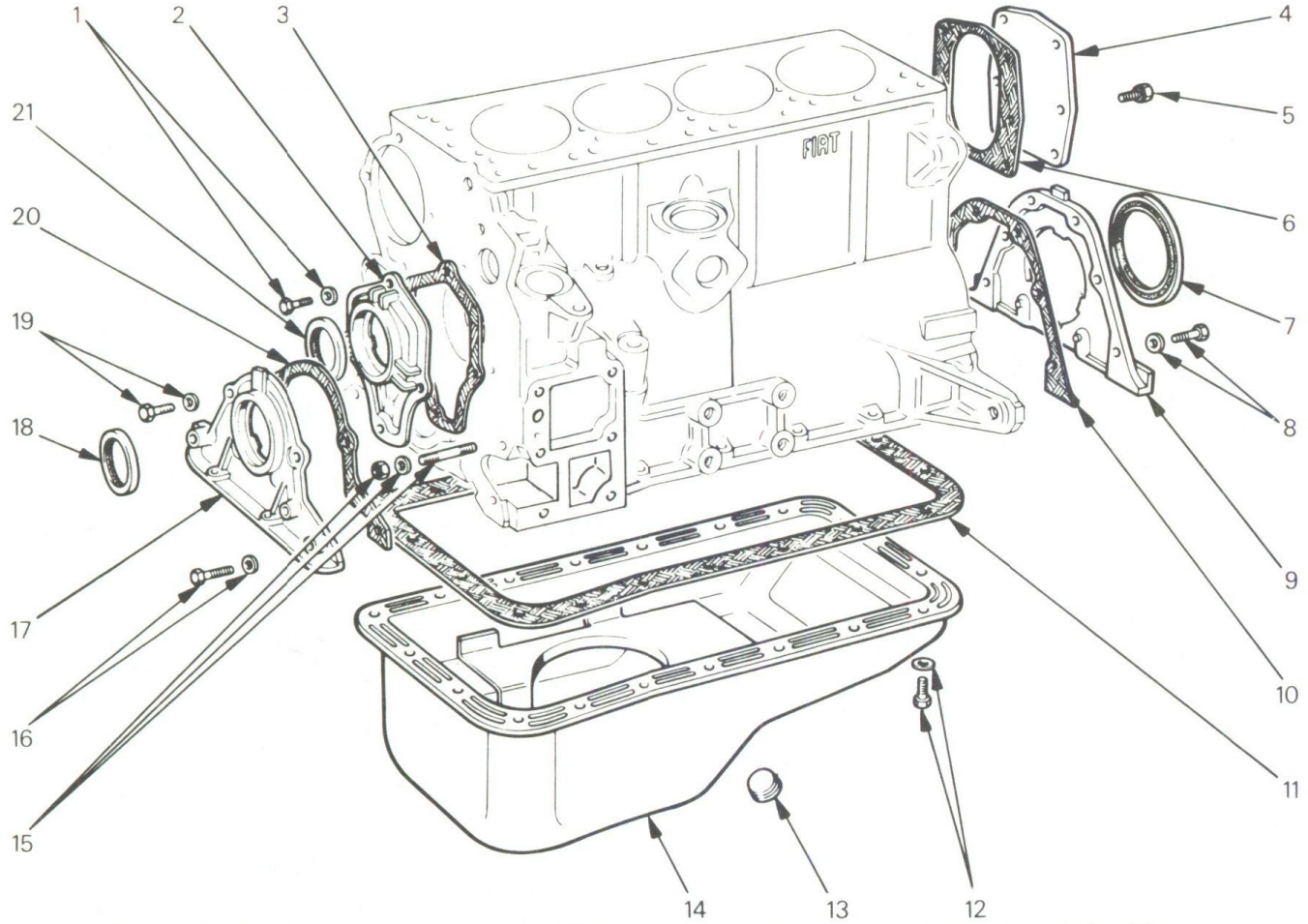

FIG 1:11 Crankcase covers and sump. Note that items 4, 5 and 6 are not fitted on 1300 engines

Key to Fig 1:11 1 Bolt and lockwasher 2 Cover for auxiliary shaft or camshaft 3 Gasket 4 Cover 5 Bolt 6 Gasket 7 Oil seal 8 Bolt and lockwasher 9 Rear cover 10, 11 Gaskets 12 Bolt and lockwasher 13 Drain plug 14 Sump 15 Stud, lockwasher and nut 16 Bolt and lockwasher 17 Front cover 18 Oil seal 19 Bolt and lockwasher 20 Gasket 21 Oil seal

accelerator rod 3 from carburetter, then remove two nuts 2 securing linkage 1 to camshaft cover.

On cars fitted with air conditioning (refrigeration) systems, refer to **FIG 1:9** and open bleed fittings 1 and 7 to allow the system to bleed completely. Disconnect pipe 4 from hose on compressor 6 and disconnect hose 5 from condenser. Disconnect connector 2 and disconnect wire 3 from valve.

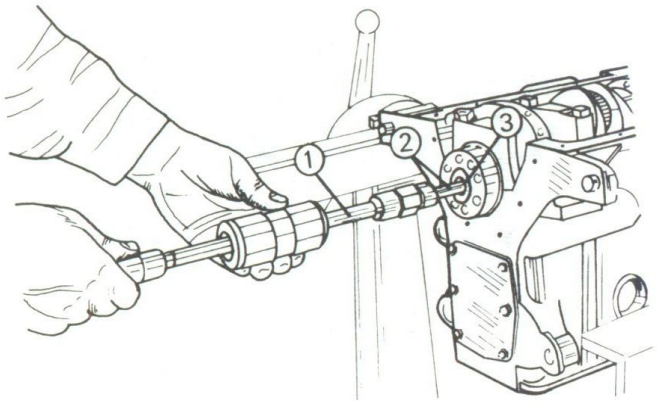

FIG 1:12 Pilot bearing removal

Refer to **FIG 1:10**. Disconnect wires from water temperature sender unit. Remove clamp 2 securing exhaust pipe 3 to manifold. Disconnect air hose 1 from pump. Disconnect two wires at connector 4.

Attach the special sling A.60511 or a suitable substitute to the engine, then carefully raise the engine until it is clear of the engine compartment and transfer it to the bench.

1:3 Dismantling the engine

Remove the engine mounting brackets from the crankcase. Remove the oil dipstick. Remove the clutch assembly as described in **Chapter 5**.

On models fitted with air conditioning (refrigeration) systems, slacken and remove the drive belts as described in **Chapter 13**, then remove the fixing bolts and nuts and detach the compressor unit with mounting brackets from the engine.

Disconnect and remove the sparking plugs and unbolt and remove the distributor. Extract and store the oil pressure and water temperature sender units. Refer to **Chapter 12** and remove the alternator and drive belt. Remove the water pump as described in **Chapter 4**.

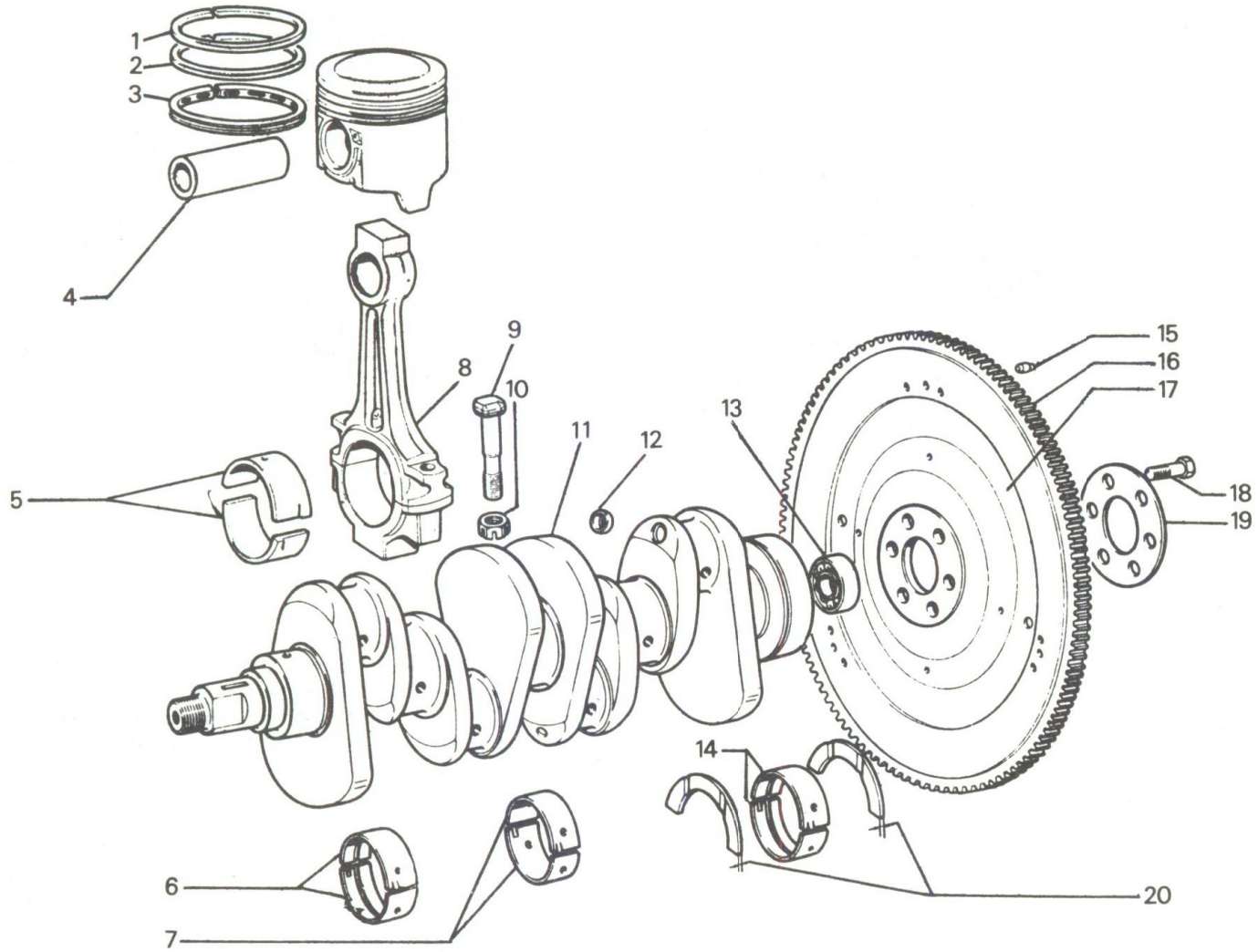

FIG 1:13 Crankshaft, connecting rod and flywheel components

Key to Fig 1:13 1 Top ring 2 Second ring 3 Oil control ring 4 Gudgeon pin 5 Big-end bearing shells 6, 7 Main bearing shells 8 Connecting rod 9 Connecting rod bolt 10 Nut 11 Crankshaft 12 Plug 13 Pilot bearing 14 Main bearing shells 15 Alignment pin 16 Starter ring gear 17 Flywheel 18 Bolt 19 Flange ring 20 Thrust bearings

Lock the flywheel (or drive plate on automatic transmission models) against rotation by suitable means, then slacken the crankshaft pulley nut and the flywheel retaining bolts. Remove the pulley and flywheel or drive plate. Note that the pulley is keyed to the crankshaft so that the timing mark will be properly located.

Remove the thermostat housing assembly from the cylinder block.

Remove the carburetter and fuel pump as described in **Chapter 2**. Loosen and remove the oil filter cartridge. On the two pushrod engines, remove the timing cover as described in **Section 1 : 7**.

Remove the cylinder head assembly as described in **Section 1 : 4**. Refer to **FIG 1 : 11** and remove sump 14 with gasket 11. Lock the crankshaft against rotation by suitable means and remove the drive sprocket from the front end of the crankshaft. Use a slide hammer 1 in conjunction with tool A.40207 (2) to remove the pilot bearing 3 from the rear end of the crankshaft (see **FIG 1 : 12**).

Remove the oil pump upper drive gear from its spindle, unscrew the bolts attaching the pump to the crankcase and withdraw the pump complete with its suction pipe.

Before unbolting the connecting rod caps, make sure that they are numbered in order to ensure that they are refitted in their original positions. Remove the bolts and caps, then remove the connecting rods and pistons through the tops of their cylinder bores. Keep all components, including bearing shells, in the correct order.

Remove the fixing bolts and detach front and rear cover plates 9 and 17 (see **FIG 1 : 11**). Mark the main bearing caps so that they will be refitted in their original positions, then take out the fixing bolts and lift off the caps and shell bearing halves. Lift out the crankshaft and remove the upper shell bearing halves from the crankcase and the thrust bearing half rings from the rear main bearing (see **FIG 1 : 13**). Keep all bearing shells and the thrust rings in the correct order.

On the two pushrod engines invert the engine so that the tappets fall away from the camshaft lobes. Remove the camshaft sprocket, then remove the retaining plate shown at 2 in **FIG 1 : 11** and carefully withdraw the camshaft.

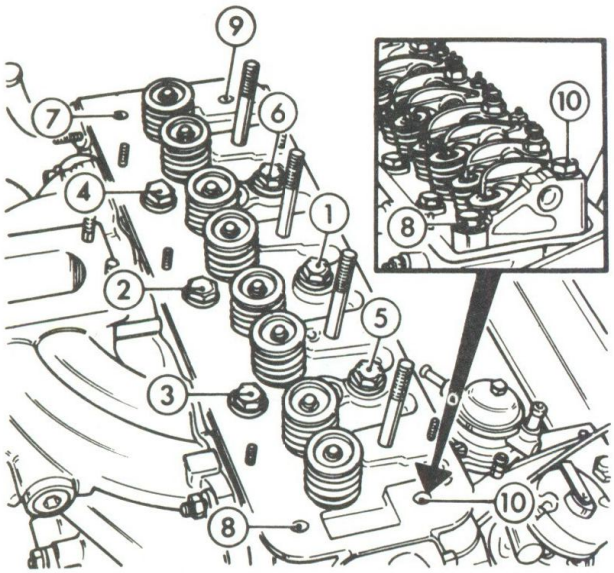

FIG 1 : 14 Cylinder head bolt tightening sequence, push-rod models

On 1800 models, remove the auxiliary shaft sprocket. Remove the retaining plate shown at 2 in **FIG 1 : 11** and withdraw the auxiliary shaft.

1 : 4 Removing and refitting cylinder head

Removal, pushrod engines :

Disconnect the battery earth cable. Drain the cooling system as described in **Chapter 4**, collecting the coolant in a clean container if it is to be re-used. Remove the air cleaner and carburetter as described in **Chapter 2**. Disconnect the radiator and heater hoses from the cylinder head. Disconnect the servo vacuum pipe. Disconnect the wire from the temperature sender unit on the cylinder head. Disconnect the breather hose from the connection on the rocker cover.

Disconnect the exhaust pipe from the manifold (see arrow in **FIG 1 : 4**). Remove the sparking plugs. Remove the rocker cover from the cylinder head and carefully remove the gasket.

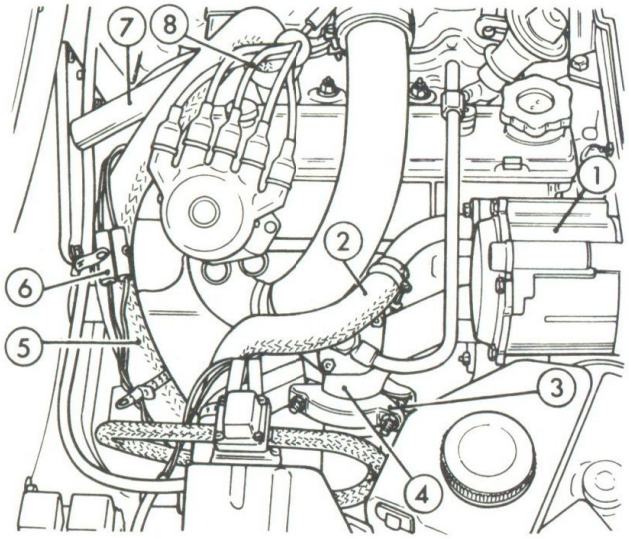

FIG 1 : 15 Disconnecting hoses and wiring, OHC models

Refer to **FIG 1 : 14**. Slacken the four cylinder head bolts which also secure the rocker gear outer mountings, in the order 10, 9, 8 and 7. Slacken the four nuts securing the rocker assembly to the cylinder head studs. Now unscrew the four bolts and four nuts alternately and evenly until all valve spring pressure has been released, then remove the nuts and bolts fully and detach the rocker assembly.

Remove the eight pushrods which operate the rockers, lifting each carefully from its location and taking care not to drop the pushrod back once it is disengaged from the tappet. Mark or store the pushrods so that they can be refitted in their original positions. Slacken the remaining cylinder head retaining bolts in the reverse order to that shown in **FIG 1 : 14**, then fully remove the bolts. Lift off the cylinder head and gasket. If the head sticks do not try to prise it off with a screwdriver as this may damage the the joint faces. Instead, carefully jar the head free with light blows from a soft-faced hammer.

Refitting :

Thoroughly clean the joint faces of the cylinder head head and cylinder block, avoiding the use of sharp tools which could scratch the surfaces. Fit a new head gasket on the cylinder block, making sure that the gasket is the correct way up by checking that each hole in the gasket matches the appropriate bore in the block surface. Refit the cylinder head and fit bolts 1 to 6 finger tight (see **FIG 1 : 14**). Slacken the locknuts and unscrew each rocker adjuster a few turns to provide extra clearance for refitting (see **Section 1 : 6**). Install the pushrods in their original locations, making sure that each engages correctly with the tappet. Install the rocker assembly over the four mounting studs and engage the lower part of each adjuster screw with the cup in the pushrod. Fit the four retaining nuts and four outer bolts, then tighten alternately and evenly until the rocker assembly is just held to the cylinder head. Fully tighten the four nuts to 4.0kgm (29lb ft). Tighten the ten cylinder head retaining bolts a little at a time, in the order shown in **FIG 1 : 14**, to a final torque of 8.5kgm (61.5lb ft).

Refit the remaining components in the reverse order of removal, using new gaskets throughout. Before refitting the rocker cover, set the valve clearances as described in **Section 1 : 6**. On completion, refill the cooling system as described in **Chapter 4** and, if necessary, carry out the idle speed adjustments as described in **Chapter 2**.

Removal, OHC models :

Disconnect the battery. Remove the air cleaner assembly as described in **Chapter 2**. On cars fitted with air conditioning (refrigeration) systems, remove the compressor drive belts as described in **Chapter 13**.

Drain the cooling system as described in **Chapter 4**, collecting the coolant in a clean container if it is to be re-used. Refer to **Chapter 4**, **FIG 4 : 1** and disconnect top hose 5 from the radiator. Remove the fixing bolts and washers and detach union 4 and gasket 7 from cylinder head water outlet 11.

Refer to **FIG 1 : 15**. Disconnect air hose 2 from air pump 1 and air hose 5 from the air manifold. Disconnect the wiring connector 6 and disconnect distributor central HT lead at its other end where it connects to the coil. Remove the sparking plugs. Remove clamp 3 securing

exhaust pipe to manifold 4. Disconnect heater hoses 7 from cylinder head and tube below exhaust manifold. Remove nut securing water tube clamp to exhaust manifold.

Correctly align the engine and remove the timing belt, referring to **Section 1 : 7** for detailed instructions. Do not turn the crankshaft or camshafts after the belt has been removed, otherwise the valves will hit the pistons and cause internal damage.

Refer to **FIG 1 : 16**. Disconnect vacuum hoses from fittings 5 on inlet manifold. Disconnect wires 4 and 7 from carburetter and wire 12 from coil. Disconnect fuel inlet hose 9 and return hose 8 from carburetter. Disconnect vacuum hose 6, vent hose 11 and fast-idle vacuum hose 10 from carburetter. Disconnect accelerator rod 3 from carburetter and remove two nuts 2 holding linkage 1 to camshaft cover.

Refer to **FIG 1 : 17**. Disconnect hose from EGR valve pipe 8. Remove bolt, nut and washer securing EGR valve tube to support 9. Disconnect fitting on air manifold 2 from cylinder head. Disconnect hose 5 from EGR valve 7. Remove two bolts 6 securing tube 4 to camshaft covers. Remove the four bolts 1 and detach the camshaft covers. Drain the oil from each camshaft housing by siphoning into a suitable container, or by drawing into a flexible plastic bottle through a suitable tube.

Slacken the 10 bolts shown at 3 in **FIG 1 : 17**, in the reverse order to that shown in **FIG 1 : 18**, then fully remove the bolts. Lift off the cylinder head, gently tapping it with a soft-faced hammer if it sticks. Remove and discard the cylinder head gasket.

Refitting :

The crankshaft and each camshaft must be correctly positioned before the cylinder head is refitted. After this, the crankshaft and camshafts must not be turned until the timing belt has been correctly installed otherwise the valves will contact the pistons and cause internal damage.

If the crankshaft has been turned while the cylinder head was removed, turn the crankshaft until pistons 1 and 4 (front and rear) are at the tops of their bores and the crankshaft pulley mark is correctly aligned with the TDC mark as described in **Section 1 : 7**. If the distributor has not been removed, make sure that the rotor arm is pointing towards the plug lead connection in the cap for cylinder number four. If not, rotate the crankshaft one full turn to bring pistons 1 and 4 to the top of their bores again. Position the camshafts so that the two reference marks on the sprockets are registering with the pointer on the front of the cylinder head as described in **Section 1 : 7**.

Fit two suitable dummy studs into two of the cylinder head bolt holes in cylinder block. Fit a new cylinder head gasket over the dummy studs, making sure that the gasket is the correct way up by checking that all holes in the gasket match the bores in the cylinder block face. Carefully position the cylinder head on the block using the dummy studs as pilots. Fit the cylinder head securing bolts finger tight, removing the dummy studs to refit the last two bolts.

The cylinder head bolts must now be progressively tightened according to the sequence shown in **FIG 1 : 18**, in not less than two stages. At the first stage tighten to a

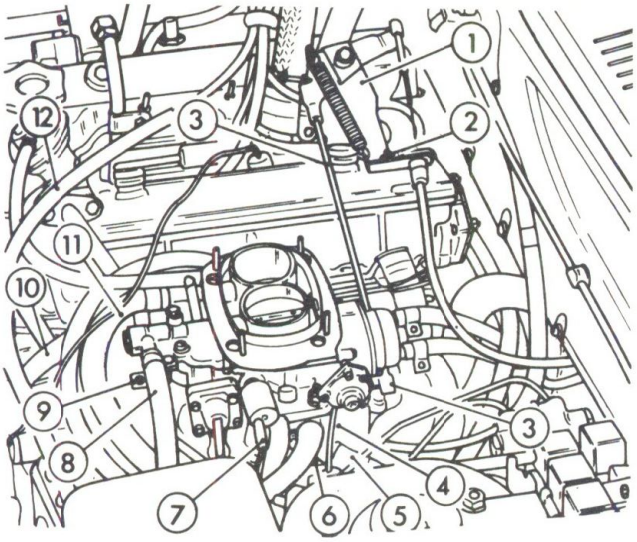

FIG 1 : 16 Items to be disconnected before cylinder head removal, OHC models

torque of 4.0kgm (29lb ft) and then to the final figure of 7.5kgm (54lb ft) on cars up to 1978 or 8.5kgm (61lb ft) for 1978 models and later.

Refit the timing belt as described in **Section 1 : 7**, then refit the ancillary items that were disconnected from the cylinder head during removal. Refill the cooling system as described in **Chapter 4**. After the engine has been run for a few minutes, switch off and allow the oil to drain back into the sump, then check and top up the engine oil level as necessary.

1 : 5 Cylinder head and camshaft servicing
Dismantling, pushrod engines :

Camshaft removal is described in **Section 1 : 3**, servicing details being given later in this section.

Remove the cylinder head as described in **Section 1 : 4**. Remove the inlet and exhaust manifolds.

During the dismantling procedure, mark or store all valve gear components in the correct order for refitting in their original positions, if they are not to be renewed.

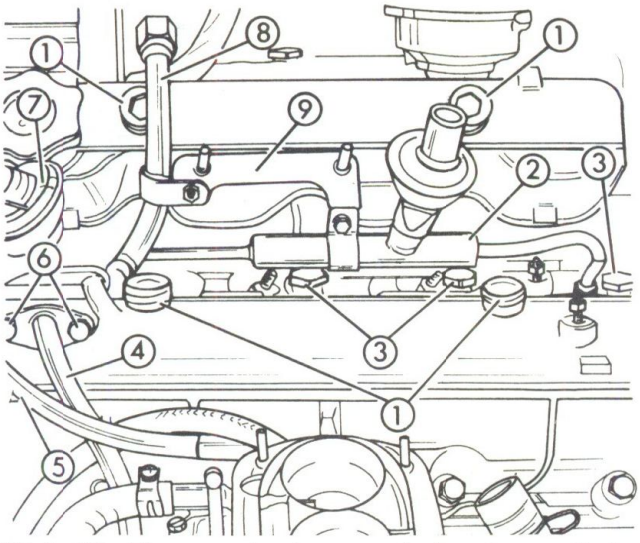

FIG 1 : 17 Disconnecting hoses and pipes from cylinder head, OHC models

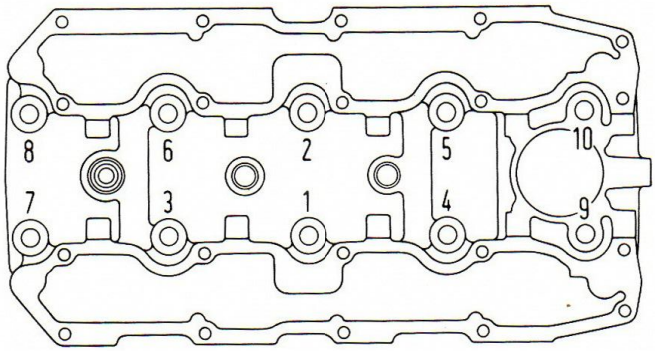

FIG 1 : 18 Cylinder head bolt tightening sequence, OHC models

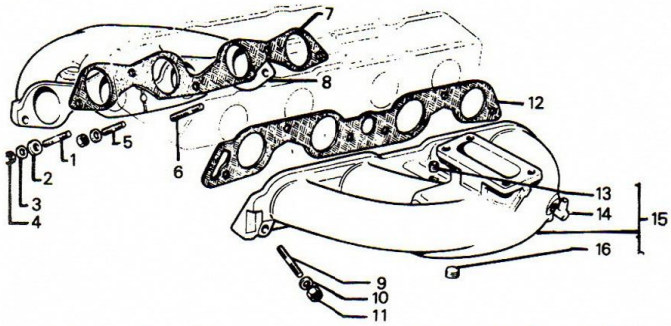

FIG 1 : 19 Inlet and exhaust manifolds, OHC models

Key to Fig 1 : 19 1 Stud 2 Nut 3 Washer 4 Circlip 5, 6 Studs 7 Gasket 8 Exhaust manifold 9 Stud 10 Washer 11 Nut 12 Gasket 13 Nut 14 Vacuum union 15 Inlet manifold 16 Screw plug

Using a suitable valve spring compressor tool, compress each valve spring in turn and remove the split taper collets. Release the spring compressor tool and remove the spring cap, spring, valve stem seal and the valve from the cylinder head.

Dismantling, OHC engines :

Remove the cylinder head as described in **Section 1 : 4** and transfer it to the bench, taking care not to damage the light alloy surface.

Refer to **Chapter 2** and remove the carburetter from the inlet manifold. Remove the inlet and exhaust manifolds as shown in **FIG 1 : 19**. Remove the camshaft housings complete with camshafts, loosening the fixing bolts alternately and evenly to avoid straining the housings.

During the following dismantling procedures, mark or store all valve gear components in the correct order for refitting in their original positions, if they are not to be renewed. Refer to **FIG 1 : 20**. Extract the tappets and adjusting shims from each valve position. Use a suitable valve spring compressor to remove the valve gear from the cylinder head. With the spring compressed, remove the split taper collets, then remove the compressor tool and collect the valve, springs, spring seats and washers.

Remove the fixing bolts and camshaft sprockets, using tool A60446 or other suitable means to lock the sprockets against rotation. Remove the covers from the rear of the camshaft housings and withdraw the camshafts

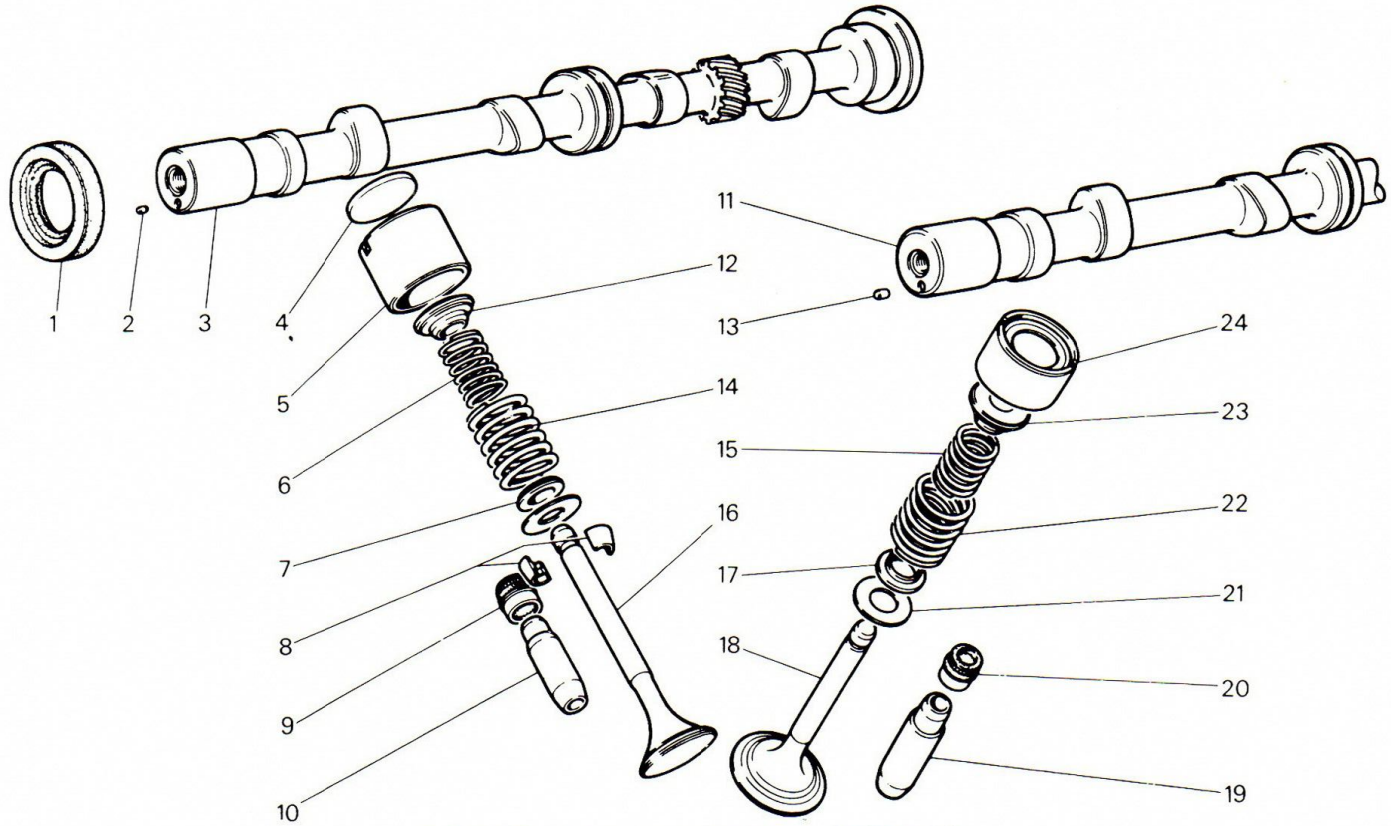

FIG 1 : 20 Valve gear components, OHC models

Key to Fig 1 : 20 1 Seal 2 Dowel 3 Exhaust camshaft 4 Tappet shim 5 Tappet 6 Inner spring 7 Lower seat 8 Collets 9 Oil seal 10 Valve guide 11 Inlet camshaft 12 Upper seat 13 Dowel 14 Outer spring 15 Inner spring 16 Exhaust valve 17 Lower seat 18 Inlet valve 19 Valve guide 20 Oil seal 21 Washer 22 Outer spring 23 Upper seat 24 Tappet

to the rear as shown in **FIG 1 : 21**. Note that the camshaft bearing surfaces and cam lobes should be lubricated with engine oil during reassembly.

Component servicing, all models:

Valves:

When the valves have been cleaned of carbon deposits, they must be inspected for serviceability. Valves with bent stems or badly burned heads must be renewed. Valves that are pitted can be recut at a service station, but if they are too far gone for this remedial treatment, new valves will be required. Valves that are in serviceable condition can be ground to their seats as described later.

Valve guides:

Valve guides that are worn or scored must be renewed. As the guides must be pressed into or out of place, reamed, then the valve seat recut for concentricity, this work should be carried out by a service station having the necessary special equipment.

Valve seat inserts:

Valve seat inserts that are pitted or burnt must be re-faced or, if they are too far gone for remedial treatment, renewed. As either operation requires the use of special equipment, the work should be carried out by a service station. If the valve seat inserts are serviceable, they should be ground to the valves as described later.

Valve springs:

Test the valve springs by comparing the efficiency of the old springs against that of new springs, or by checking the springs against the data supplied in **FIG 1 : 22** or **1 : 23**. Springs should have a minimum free height as shown by the outer arrow, and minimum compressed heights as shown by the inner two arrows under the loads stated. Measurements are given in millimetres, loads in kilograms.

To test the springs against the efficiency of a new spring, insert both the old and new springs end to end with a metal plate between them into the jaws of a vice. If the old spring is weakened, it will close up first when pressure is applied. Take care that the springs do not fly out of the vice under pressure. Any spring which is shorter or weaker than standard, or which is damaged or distorted, should be renewed.

Tappets:

Pushrod engines:

Check the tappets and their bores for damage, ovality or excessive wear. The face of the tappet which contacts the cam lobe must not be dished or pitted. If any tappet is damaged or worn excessively it should be renewed. Tappet outside diameter and bore inside diameter should be within the tolerances, given in millimetres, shown in **FIG 1 : 24**. Excessively worn tappets should be renewed. If any tappet bore is scored or worn to a diameter exceeding the limit, the bore must be reamed to accept an oversize tappet. This work must be carried out by a fully equipped service station.

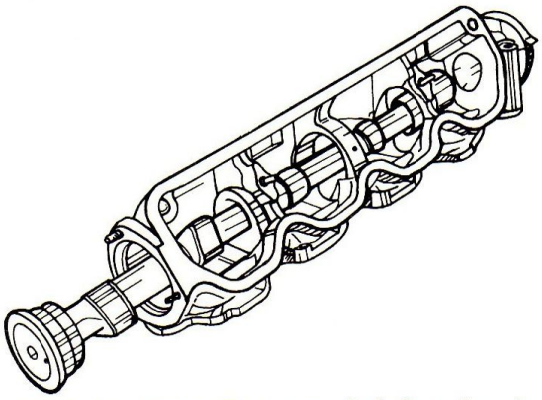

FIG 1 : 21 Removing a camshaft from housing

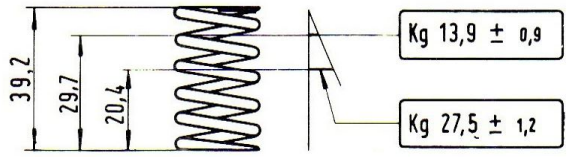

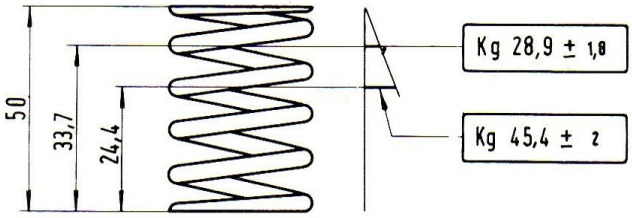

FIG 1 : 22 Valve spring checking data, pushrod models

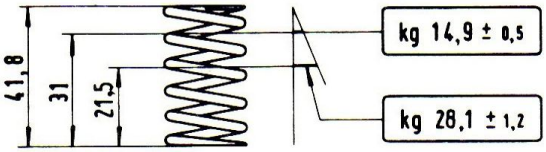

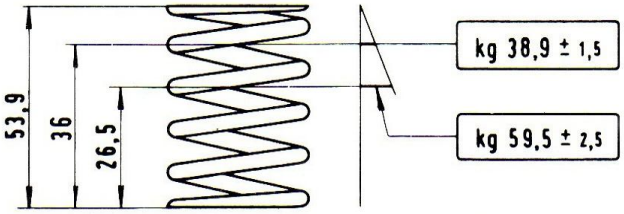

FIG 1 : 23 Valve spring checking data, OHC models

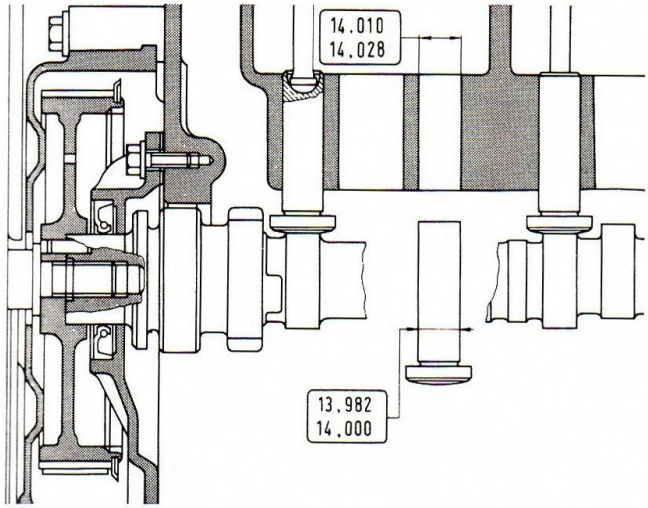

FIG 1 : 24 Tappet and bore dimensions, pushrod models

OHC models :

Inspect the outside surfaces of the tappets and the inside surfaces of tappet bores should be checked for wear or scoring and parts renewed as necessary. The outside diameter of tappets and inside diameter of bores should be within the tolerances, given in millimetres, shown in **FIG 1 : 25**. The fit clearance between each tappet and its bore should be between 0.005 and 0.050mm (0.0002 and 0.0020in). Renew parts if necessary to bring clearances within limits. The tappet plate which contacts the cam lobe should have a highly polished surface on its upper side. Renew the plate if the surface is worn or damaged, making sure of the correct thickness.

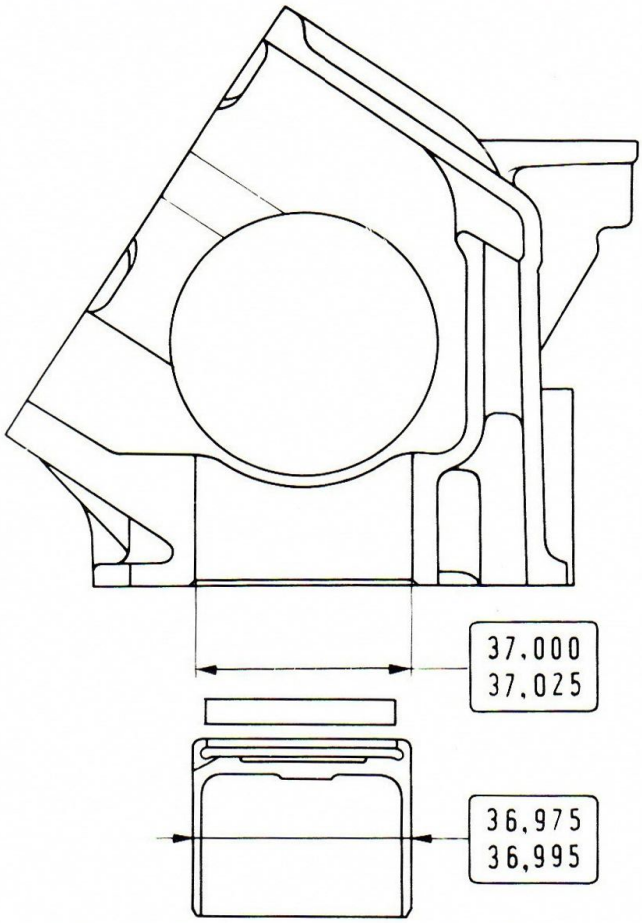

FIG 1 : 25 Tappet and bore dimensions, OHC models

Rocker gear and pushrods :

Inspect the rockers for wear or damage, especially at the tips, and renew any found to be unserviceable. The end of the adjuster which fits in the pushrod cup should be smooth and have a polished appearance. Remove the rockers from the shaft, keeping the parts in the correct order for refitting in their original positions, and examine the rocker bores and shaft bearing surfaces for scoring or excessive wear. Shaft outside diameter and rocker bore diameter tolerances, given in millimetres, are shown in **FIG 1 : 26**. Renew parts as necessary if any shaft bearing diameter or bore diameter is worn beyond limits.

Camshaft :

Pushrod models :

Check the camshaft lobes and bearing journals and the bearing bores in the cylinder block for wear or scoring, renewing parts as necessary. Camshaft bearing outer diameter measurement tolerances and camshaft bearing inside diameter measurement tolerances, given in millimetres, are shown in **FIG 1 : 27**. If the camshaft bearings are worn beyond limits, or if they are scored or damaged, new bearings must be fitted. As the installation of camshaft bearings requires the use of special in-line reaming equipment the work should be carried out by a fully equipped service station.

Mount the camshaft between centres and use a dial gauge to check cam lift. This should be 9.90mm (0.389in) for 1300 models, 10.32mm (0.406in) for 1600 models up to 1978. From 1978 the cam lift should be 9.750mm (0.384in) on both sizes of engine. The clearance of the camshaft journals in their bearings should be 0.026 to 0.071mm (0.0010 to 0.0028in) for the two end bearings or 0.031 to 0.076mm (0.0012 to 0.0029in) for the centre bearing. Renew the camshaft if specifications are not met, or if bearings or cams are scored or excessively worn.

OHC models :

Camshaft bearing journal outer diameter measurement tolerances and bearing inside diameter measurement tolerances, given in millimetres, are shown in **FIG 1 : 28**. Renew parts as necessary if excessive wear is indicated.

Mount each camshaft in turn between centres and use a dial gauge to check cam lift. This should be 9.72mm (0.381in) on 1800 engines, 9.41mm (0.370in) on 1300 and 1600 engines or 9.90mm (0.390in) on 2000 engines. Check also on the journal to bearing clearances specified in **Technical Data**. Renew the camshaft if specifications are not met.

Decarbonising and valve grinding :

Avoid the use of sharp tools which will damage the cylinder head or piston surfaces. Remove all traces of carbon deposits from the combustion chambers, inlet and exhaust ports and joint faces. If the pistons have not been removed and cleaned during previous engine dismantling, plug the waterways and oil holes in the top surface of the cylinder block with pieces of rag to prevent the entry of dirt, then clean the carbon from the piston crowns.

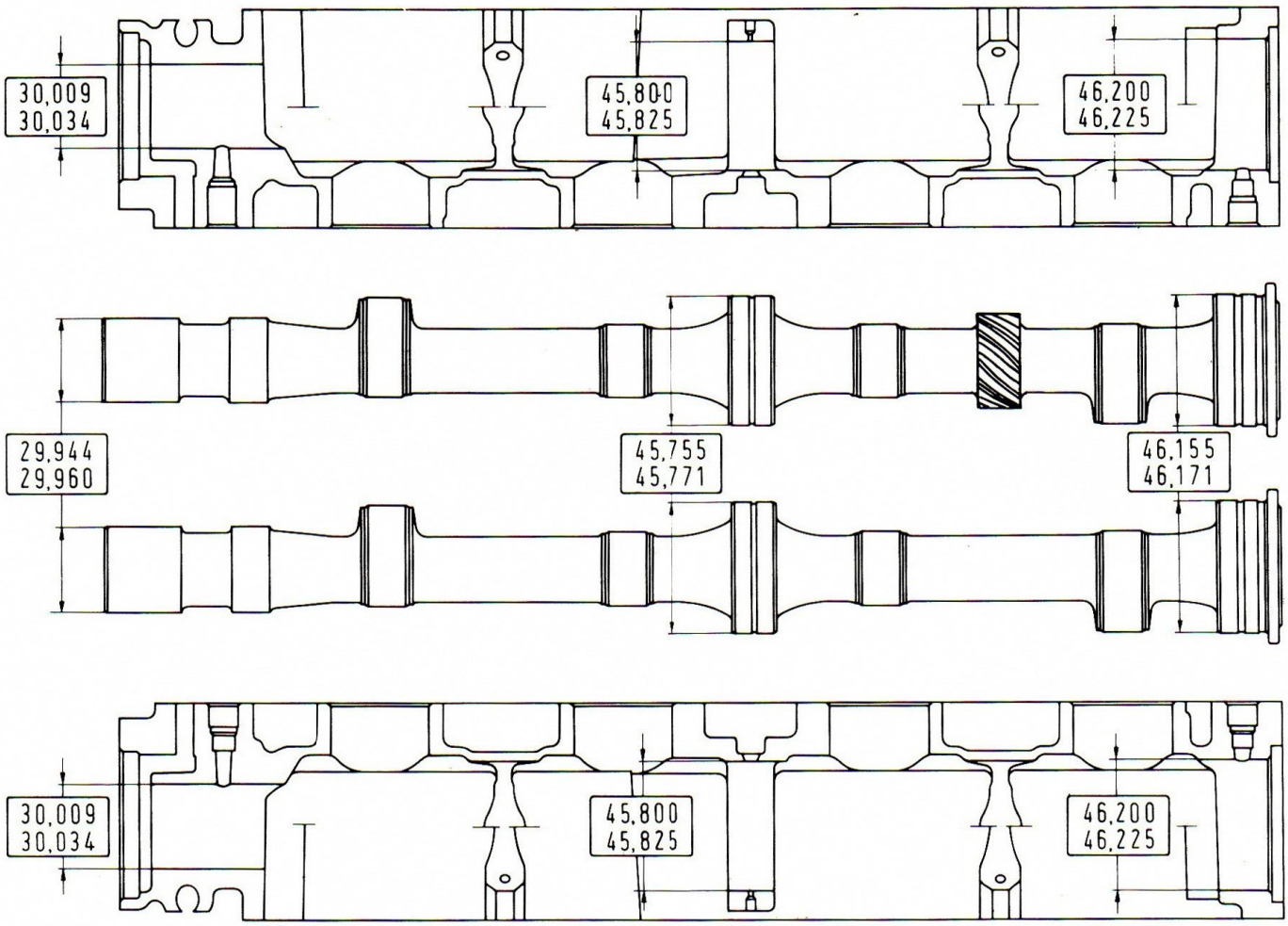

FIG 1 : 28 Camshaft and bearing dimensions, OHC models

To grind-in valves, use a medium grade carborundum paste unless the seats are in very good condition, when fine grade paste can be used at once. A light spring under the valve head will assist in the operation and allow the valve to be lifted from its seat without releasing the grinding tool. Use a suction cup tool and grind with a semi-rotary movement, letting the valve rise off its seat occasionally by pressure of the spring under the head.

Use paste sparingly. When both seats have a smooth, matt-grey finish, clean away every trace of grinding paste from port and valve.

Reassembly, all models:

Reassembly is a reversal of the dismantling procedure, lubricating all moving parts with clean engine oil. New oil seals should be fitted to inlet and exhaust valve guides as shown in **FIG 1 : 29**. Using tool A.60313/1 as shown at 1, push seal 2 over valve stem 3. Using tool A.60313/2 as shown at 5, fit the oil seal over the machined end of the valve guide. Fit all remaining components in the reverse order of removal, using new gaskets throughout. When refitting camshaft housings on OHC models, tighten the fixing bolts alternately and evenly to avoid distortion of the housings.

When the cylinder head is fully assembled, refit as described in **Section 1 : 4**, then check and adjust the valve clearances as described in the next section.

1 : 6 Valve clearance adjustment

The correct adjustment of valve clearances is important as they affect engine timing and performance considerably. Excessive clearance will reduce valve lift and opening duration and reduce engine performance, causing excessive wear on the valve gear components and noisy operation. Insufficient or zero clearance will again affect engine timing and, in some circumstances, can hold the valve clear of its seat. This will result in much reduced performance due to lost compression and the possibility of burned valves and seats. Valve clearances should be checked at the intervals specified in the manufacturer's service schedule as routine maintenance and, additionally, whenever the cylinder head has been serviced.

Checking and setting of valve clearances must be carried out when the engine is cold. A warm engine will take some hours to cool properly, so allow sufficient time for this.

Pushrod models:

Remove the rocker cover from the cylinder head. The engine will be easier to turn over if the sparking plugs are removed, but this is not essential. To turn the engine on manual transmission models, first make sure that the car is on level ground so that it will not move when the brake

is released, then select top gear and release the handbrake. The car can then be pushed backwards or forwards to turn the engine. On models fitted with automatic transmission, the engine must be turned by pulling on the drive belts at the front of the engine, or by using a suitable spanner on the crankshaft pulley securing bolt. Do not attempt to turn the engine by means of any other pulley bolt, as this will overload and damage internal components.

The valve clearances for inlet and exhaust valves at No 1 (front) cylinder must be adjusted when the valves for cylinder No 4 are on the overlap. Turn the engine until both valves for No 4 (rear) are open, then turn the engine as necessary until these valves are equally depressed. Now check the clearances between the valves and rocker tips at No 1 cylinder, as shown in **FIG 1 : 30**, using feeler gauges. The clearance should be 0.20mm (0.008in) for both inlet and exhaust valves when the engine is cold.

To adjust the clearance, refer to **FIG 1 : 30**. Loosen the locknut with a spanner 3 and turn the adjuster with a second suitable spanner 2, until clearance between valve stem and tip of rocker 4 is correct. The feeler gauge 1 should slide in the gap with a slight drag, being neither tight nor loose. When the clearance is correct, tighten the locknut without moving the adjuster and recheck the clearance. When both clearances are correct at No 1 cylinder, proceed to the next cylinder. Check the clearances at No 3 cylinder with the valves at No 2 cylinder on the overlap as described, No 4 with No 1 on the overlap and No 2 with No 3 on the overlap. On completion, refit the rocker cover and the sparking plugs if removed. Run the engine and check for oil leaks at the rocker cover gasket.

OHC models :

Refer to **FIG 1 : 17** and remove the fixing bolts shown at 1 and remove bolts 6 to release tube 4. Remove the camshaft cover plates from the top of the engine. The engine will be easier to turn over if the sparking plugs are removed, but this is not essential. To turn the engine on manual transmission models, make sure that the car is on level ground so that it will not move when the brake is released, then select top gear and release the handbrake. The car can then be pushed backwards or forwards to turn the engine. On models fitted with automatic transmission, turn the engine by means of a spanner on the crankshaft pulley bolt. Do not attempt to turn the engine by means of a spanner on a camshaft pulley bolt, as this will overload internal components and damage the toothed timing belt.

Turn the engine until the cam lobe over the valve to be checked is pointing upwards, away from the tappet. Use feeler gauges to check the clearance between the cam and the tappet as shown in **FIG 1 : 31**. The clearances specified for a cold engine are: 1300 engine, 0.42mm (0.016in) for inlet valves and 0.48mm (0.019in) for exhaust valves; on all other OHC engines, 0.45mm (0.018in) for inlet and 0.60mm (0.024in) for exhaust valves. If the clearance at any valve position is outside the limit stated, adjustment will be necessary.

If adjustment is needed, use pressure lever A.60443 to lever the tappet away from the camshaft as shown in **FIG 1 : 32**. With the tappet held down, insert tool A.60422 and remove the pressure lever, as shown in

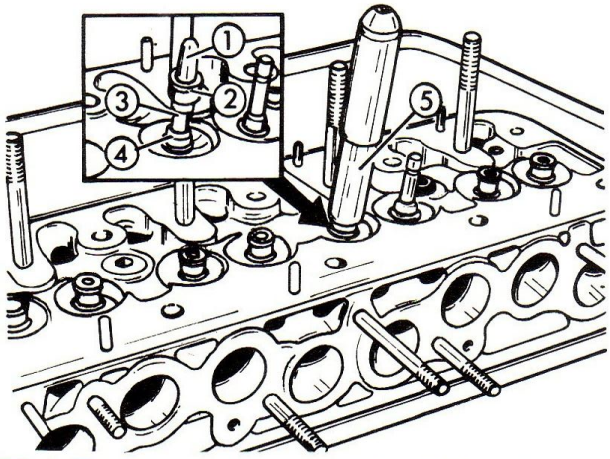

FIG 1 : 29 Fitting valve stem seals, OHV engine components shown

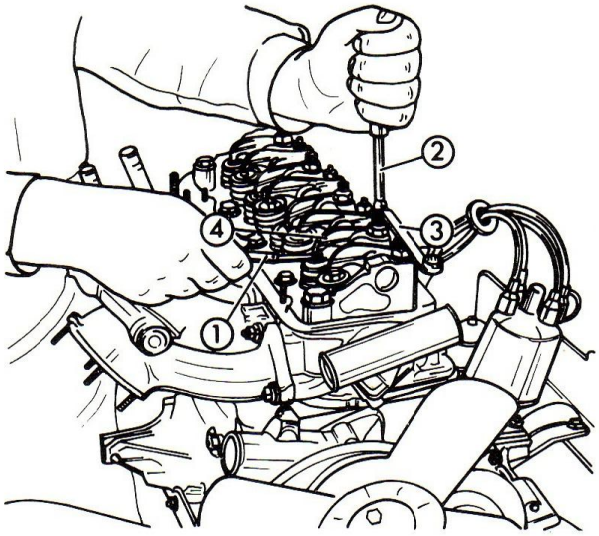

FIG 1 : 30 Valve clearance adjustment, pushrod models

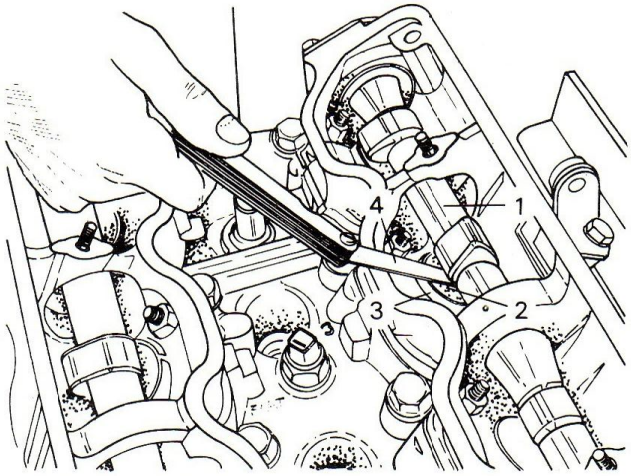

FIG 1 : 31 Checking valve clearances, OHC models

Key to Fig 1 : 31 1 Camshaft 2 Tappet shim 3 Tappet 4 Feeler gauge

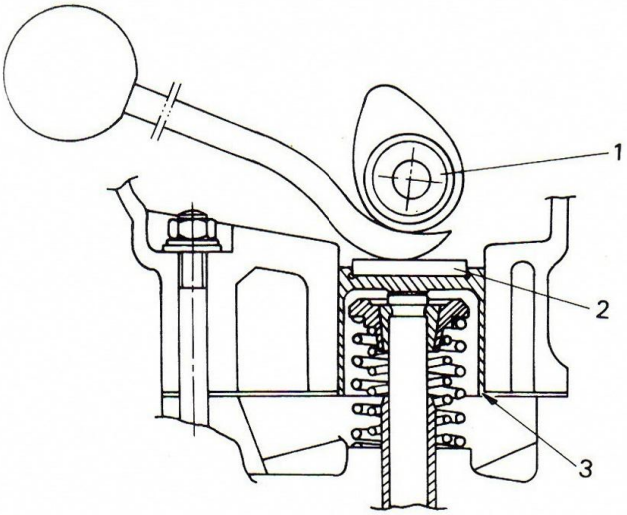

FIG 1:32 **Using the pressure lever to push the tappet away from the camshaft**

Key to Fig 1:32 1 Camshaft 2 Tappet shim 3 Tappet

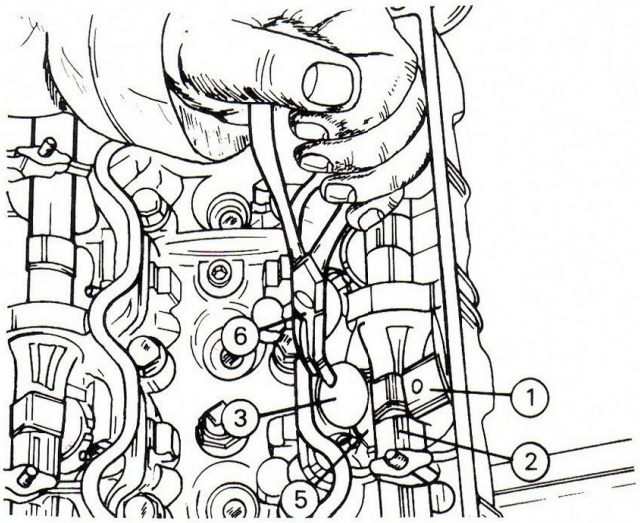

FIG 1:34 **Removing the shim from the tappet**

Key to Fig 1:34 1 Tool A.60422 2 Camshaft 3 Tappet shim 5 Tappet 6 Pliers

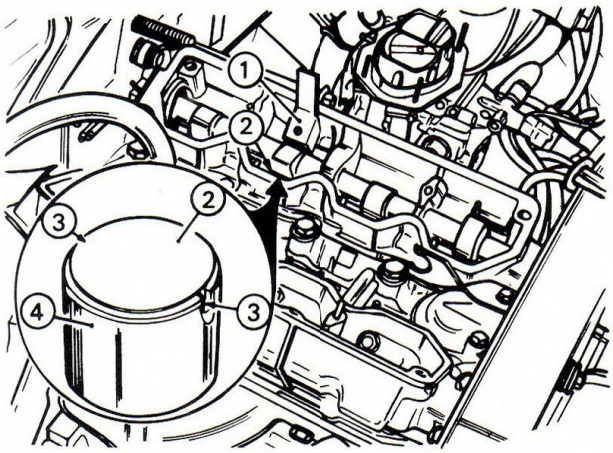

FIG 1:33 **Fitting special tool to hold the tappet down for shim removal**

Key to Fig 1:33 1 Tool A.60422 2 Tappet shim 3 Notches for shim removal 4 Tappet

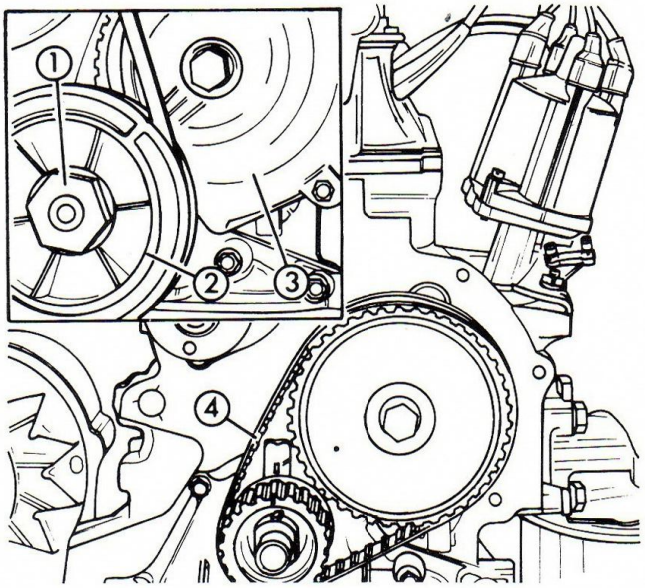

FIG 1:35 **Timing belt cover removal, pushrod models**

Key to Fig 1:35 1 Nut 2 Crankshaft pulley 3 Timing belt cover 4 Timing belt

FIG 1:33. Use a suitable pair of pliers to extract the shim from the tappet as shown in **FIG 1:34**.

If the clearance previously measured was greater than the correct measurement, it will be necessary to fit a new shim which is thicker by the amount of the difference and vice versa. For example, if an inlet valve clearance was found to be 0.65mm, the clearance is 0.2mm greater than the correct clearance of 0.45mm and a shim must be used which is 0.2mm thicker than the shim just removed. Shim thickness is marked on each shim, but it is recommended that this figure be checked by the use of a micrometer to ensure accuracy. Shims must be fitted with the thickness marking towards the valve.

When the correct thickness of shim has been selected, fit it into place in the tappet and use the pressure lever to hold down the assembly while removing the second special tool. Recheck the clearance with feeler gauges to ensure that it is correct. Repeat the checking and adjustment procedure for each of the remaining valves. On completion, refit the parts removed in the reverse order of removal.

1:7 Timing belt

The timing belt should be checked at 40,000km (24,000 mile) or 2 yearly intervals and renewed at 60,000km (36,000 mile) or 3 yearly intervals. The belt must also be renewed whenever it has been removed for access to other components during servicing procedures. **Care should be taken when handling the belt to avoid bending it to acute angles, as this could cause permanent damage to the belt fabric.**

Removal, pushrod models:

Refer to **Chapter 4** and remove the alternator and water pump drive belt. Refer to **FIG 1:35**. Remove securing nut 1 and detach crankshaft pulley 2, collecting the key. Detach cover 3 for access to timing belt 4.

Before removing the belt, turn the engine until the timing marks on crankshaft and camshaft sprockets are correctly aligned as shown in **FIG 1:36**. Mark 1 on the crankshaft sprocket must align exactly with reference mark 2 and mark 3 on the camshaft sprocket must align exactly with reference mark 4. On models fitted with a cast iron camshaft sprocket, the mark is in the position shown at 3 in the main illustration, but if a plastic camshaft sprocket is fitted, the mark will be as shown at 3 in the inset.

With the timing marks correctly aligned, carefully remove the timing belt from the sprockets. **Neither the crankshaft nor camshaft must be turned when the belt is removed, unless the cylinder head and pushrods are completely removed, otherwise the valves will contact pistons and cause serious internal damage.** If it is necessary to remove the camshaft sprocket while the cylinder head and pushrods are installed, tool A.60457 must be fitted to the sprocket 1, as shown at 3 in **FIG 1:37**, without rotating the sprocket at all. The tool will lock the sprocket in place while bolt 2 is removed. Collect the key as the sprocket is freed from the camshaft.

Refitting:

Make sure that the timing marks are correctly aligned as shown in **FIG 1:36**. It is permissible to rotate the camshaft or crankshaft a fraction to exactly realign the timing marks or to correctly engage the teeth on the timing belt, if belt removal caused them to move slightly. Carefully install the new timing belt over the sprockets, taking care to avoid straining the belt and making sure that the belt and sprockets are not contaminated with dirt or oil. Refit the remaining components in the reverse order of removal.

Removal, OHC models:

Drain the cooling system as described in **Chapter 4**, collecting the coolant in a clean container if it is to be re-used. On models fitted with air conditioning (refrigeration) systems, remove the compressor drive belts as described in **Chapter 13**.

Remove the sparking plugs, then turn the engine by means of a spanner on the crankshaft pulley nut until pressure can be felt by a thumb placed over No 4 (rear) sparking plug hole. This indicates that the piston is rising on the compression stroke for No 4 cylinder. Now turn the engine a little more as necessary until the mark on the crankshaft pulley aligns with the longest reference mark on the timing belt cover, and the mark on the rear of each camshaft sprocket aligns with the raised reference mark on the housing (see **FIG 1:38**).

Refer to **FIG 1:39**. Disconnect top hose 4 then remove two bolts and washers 5 and detach union 6 with gasket. Remove three bolts 1 and nut 2, then detach timing belt cover 3.

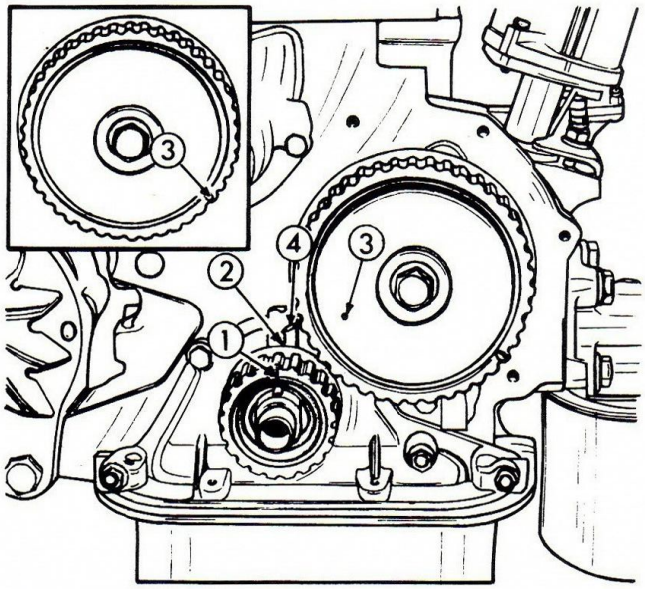

FIG 1:36 Aligning engine timing marks, pushrod models

Key to Fig 1:36 1 Crankshaft sprocket mark 2 Reference mark 3 Camshaft sprocket mark 4 Reference mark

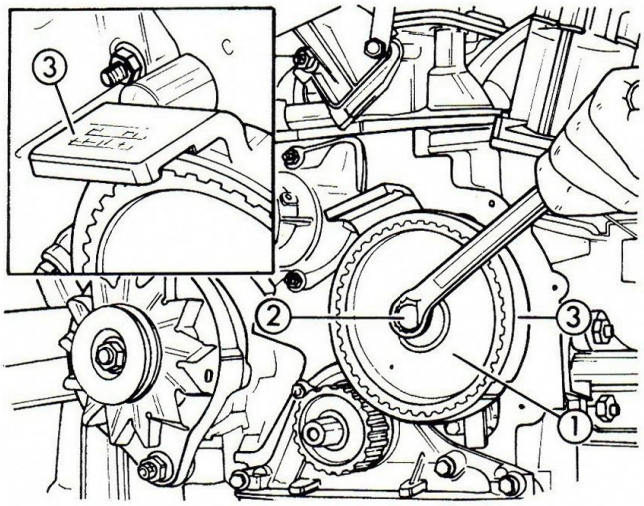

FIG 1:37 Camshaft sprocket removal

Key to Fig 1:37 1 Camshaft sprocket 2 Securing bolt 3 Special tool

Refer to **FIG 1:40**. Carefully remove drive belt 7 from the pulleys on camshaft and air pump. Loosen the alternator mountings to slacken the drive belt 5, then remove the belt from the pulleys. Loosen nut 3 on tensioner 2 and loosen bolt 4 at the spring support. Lever the tensioner away from the belt and tighten nut 3 to hold the tensioner away from the belt. Carefully remove the belt 1 from camshaft, auxiliary shaft and crankshaft sprockets. **None of the sprockets must be moved from the positions previously set, otherwise valves will contact pistons and cause serious internal damage.**

Refitting:

Make sure that the auxiliary shaft sprocket is correctly aligned, with the sprocket fixing bolt, alignment mark

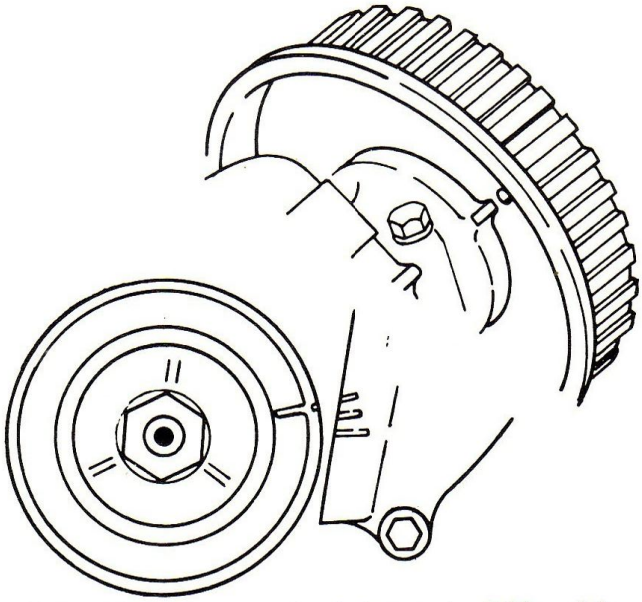

FIG 1 : 38 Aligning engine timing marks, OHC models

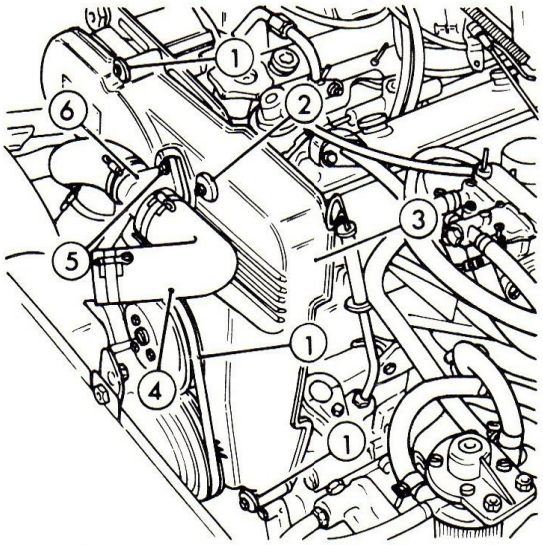

FIG 1 : 39 Timing belt cover removal

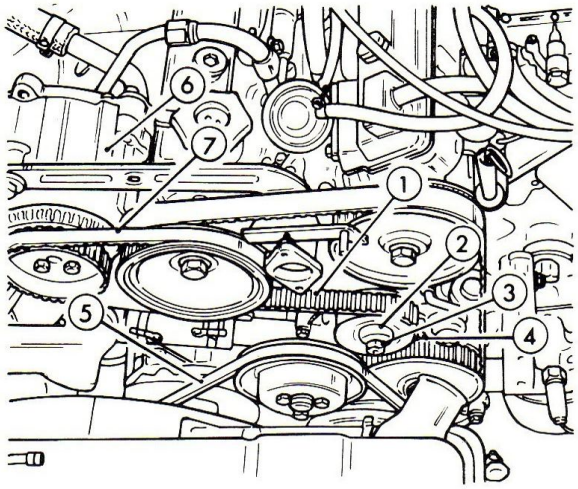

FIG 1 : 40 Timing belt installation

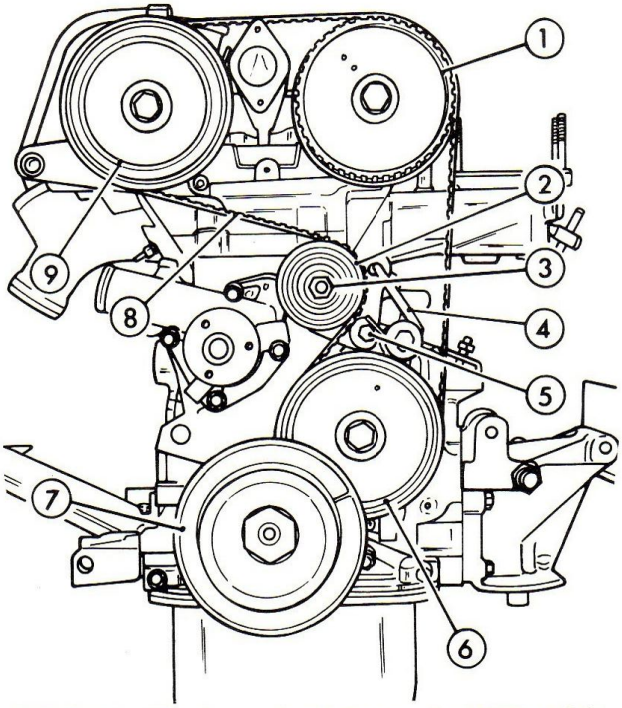

FIG 1 : 41 Aligning engine timing marks, OHC models

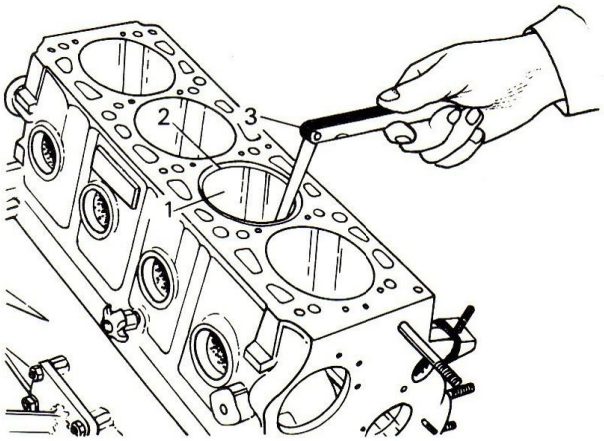

FIG 1 : 42 Checking piston ring end gaps

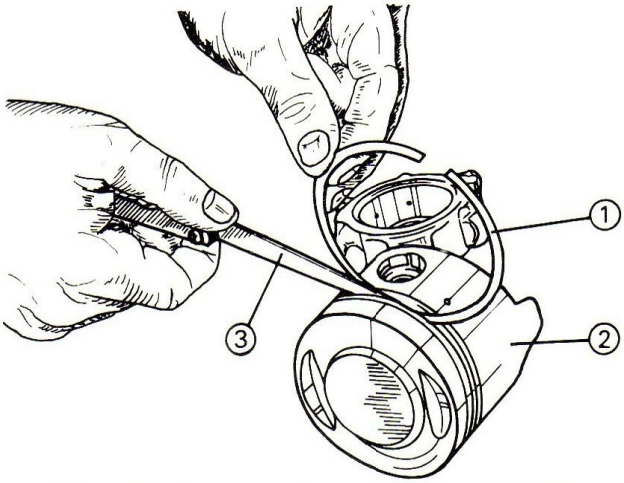

FIG 1 : 43 Checking piston ring side clearance

(hole) and tensioner bolt in line as shown in **FIG 1 : 41**. Carefully fit the new timing belt over the pulleys, taking care not to strain the belt and to avoid contamination from grease or dirt. Fit the belt over the crankshaft and auxiliary shaft sprockets first, then over the inlet camshaft sprocket 1 and the exhaust camshaft sprocket 9. Make sure that all slack in the belt is between sprocket 9 and tensioner pulley 2, at point 8. Fit the belt over the tensioner, then make sure that all timing marks are correctly positioned. Slacken nut 3 and bolt 5, so that tensioner spring 4 can move pulley 2 to tighten the belt. Turn the engine two full turns in the forward direction to settle the belt, then firmly tighten nut 3 and bolt 5 to lock the tensioner in position. Check again that the timing marks align correctly.

Carefully install the toothed belt over air pump and camshaft pulleys, then check the belt tension. If the air pump drive belt is excessively slack, a new belt should be fitted. Refit the remaining parts in the reverse order of removal. On completion, refill the cooling system as described in **Chapter 4** and, on models fitted with air conditioning (refrigeration) systems, adjust the compressor drive belts as described in **Chapter 13**.

1 : 8 Pistons and connecting rods

Clean carbon deposits from the piston crowns, then gently ease the rings from their grooves and remove them over the tops of the pistons. Clean carbon from the piston ring grooves, for which job a piece broken from an old piston ring and ground to a chisel point will prove an ideal tool. Inspect the pistons for score marks or any signs of seizure, which would dictate renewal.

Fit the piston rings one at a time into the bore from which they were removed, pushing them down with the inverted piston to ensure squareness. Measure the gap between the ends of the ring while it is positioned in the bore, using feeler gauges as shown in **FIG 1 : 42**. Compare the measurement with the figures given in **Technical Data**. Hold the ring in the piston groove from which it was removed as shown in **FIG 1 : 43**, then measure the side clearance with feeler gauges. Compare the measurement with the figures given in **Technical Data**. If the clearance measurements in either test are at or near the wear limits, new rings must be fitted. Excessive ring clearance can be responsible for high oil consumption and poor engine performance.

Check the cylinder bores for score marks and remove glaze and carbon deposits. Badly scored or worn surfaces will dictate a rebore to accept new pistons, this being a specialist job. The fitting of new pistons to connecting rods must be carried out by a Fiat service station, due to the need for special heating and press equipment to remove and refit the gudgeon pins.

Check the clearance of each piston in its bore, measuring with feeler gauges at right angles to the gudgeon pin and at 52.4mm (2.06in) from the piston crown on pushrod engines and 2000 overhead camshaft engines. On the 1800 OHC engine the dimension should be 47mm (1.85in), while on 1300 and 1600 OHC engines the clearance should be measured at 25mm (0.99in) from the bottom of the piston skirt. The correct clearances are : 0.070 to 0.090mm (0.0027 to 0.0035in) on pushrod and 2000 OHC engines ; 0.060 to 0.080mm (0.0024 to 0.0031in) on 1300 OHC engines ; 0.050 to

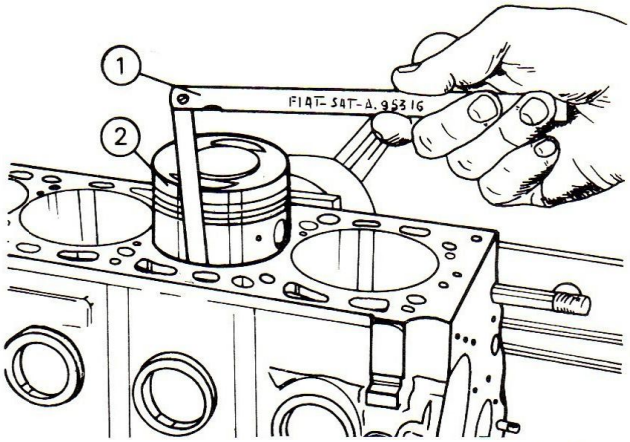

FIG 1 : 44 Checking piston clearance in cylinder bore

0.070mm (0.0020 to 0.0027in) on 1600 OHC engines ; and 0.040 to 0.060mm (0.0016 to 0.0024in) on 1800 OHC engines (see **FIG 1 : 44**). Excessive clearance will dictate the fitting of new pistons and, possibly, reboring of the cylinders. This work must be carried out by a service station.

1 : 9 Crankshaft and bearings

If there has been a big-end bearing or main bearing failure, the crankshaft journal must be examined for damage and for transfer of metal to its surface. The oilway in the crankshaft must be checked to ensure that there is no obstruction. Big-end and main bearing clearance can be checked by the use of Plastigage, which is the trade name for a precisely calibrated plastic filament. The filament is laid along the bearing to be measured for working clearance as shown in **FIG 1 : 45**, the bearing cap fitted and the bolts tightened to the specified torque. The bearing is then dismantled and the width of the flattened filament measured with the scale supplied with the material. The figure thus measured is the actual bearing clearance. Both main and big-end bearing clearances are measured in a similar manner.

Note that each main bearing must be measured separately and none of the remaining bearing caps must

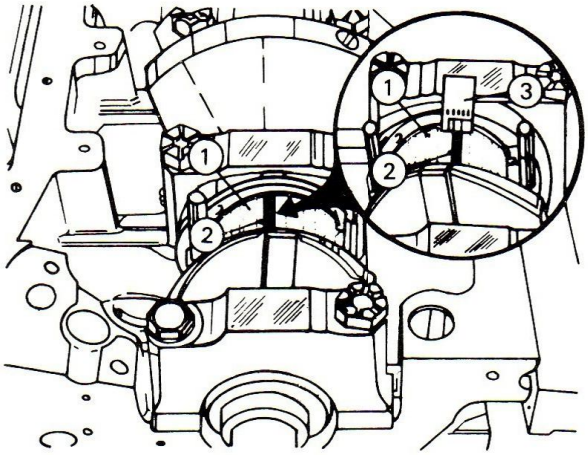

FIG 1 : 45 Using Plastigage to measure shell bearing clearances

Key to Fig 1 : 45 1 Crankpin 2 Plastigage 3 Measuring scale

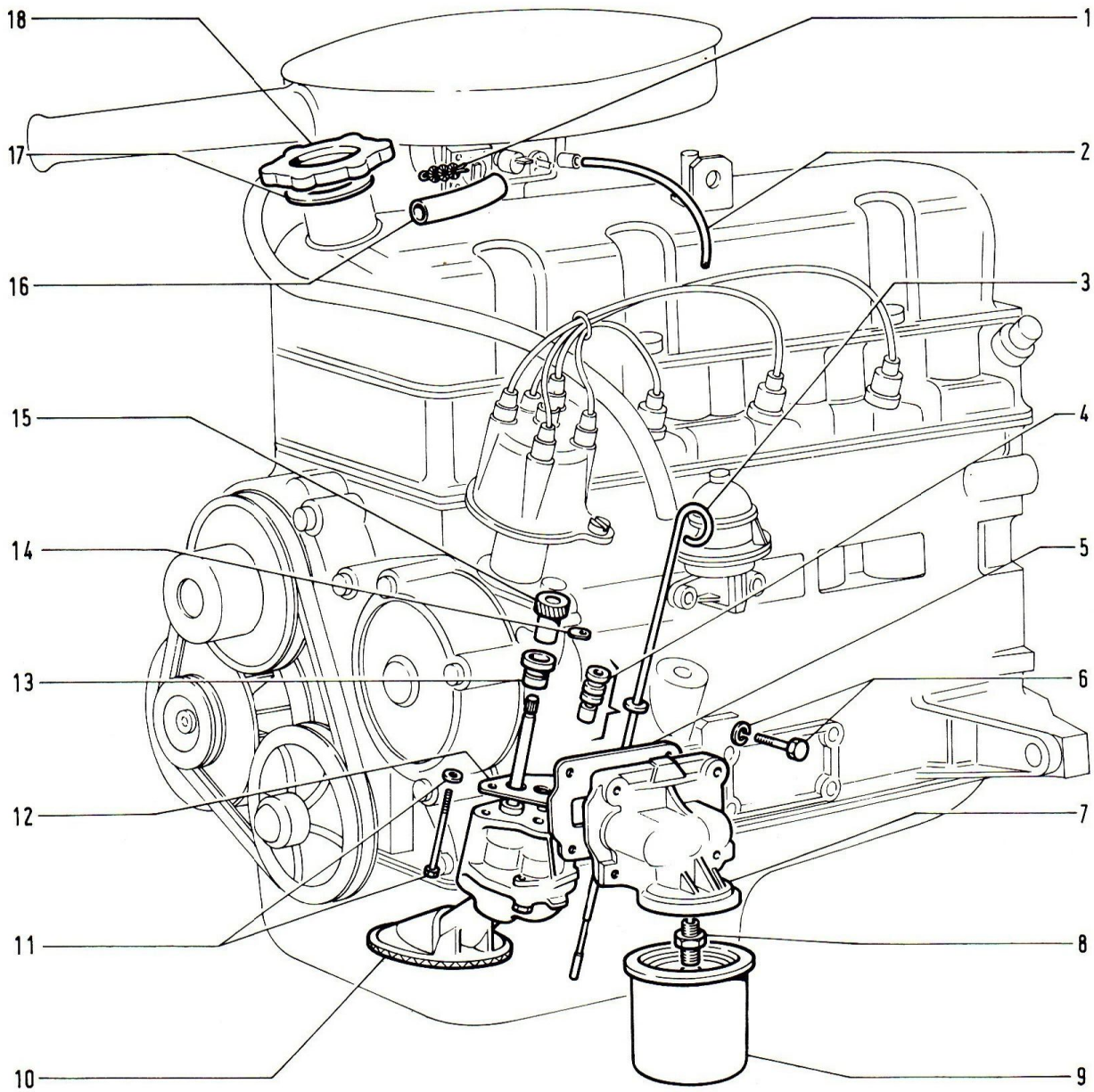

FIG 1 : 46 The oil pump and related components, pushrod engines

Key to Fig 1 : 46 1 Flame trap 2 Breather hose 3 Dipstick 4 Seal 5 Gasket 6 Bolt and lockwasher 7 Filter housing 8 Filter union 9 Oil filter 10 Oil pump 11 Bolt and washer 12 Gasket 13 Pump drive gear bush 14 Washer 15 Oil pump drive gear 16 Breather hose 17 Seal 18 Oil filler cap

be fitted during the operation. The bearing surfaces must be clean and free from oil and the crankshaft must not be turned during the measuring procedure. The point at which the measurement is taken must be close to the respective dead centre position and no hammer blows must be applied to the bearing or cap.

Place a length of plastic filament identical to the width of the bearing on the crankshaft journal, then fit the main or big-end bearing cap with liners and tighten to the specified torque. Remove the bearing cap and measure the width of the flattened filament to obtain the running clearance for that bearing. Check the figure with those given in **Technical Data** in the **Appendix**. If the bearing running clearance is too high, new bearing shells must be selected by the measurement procedure to bring the running clearance to within the specified limits.

1 : 10 Auxiliary shaft

Auxiliary shaft removal on OHC models is described in **Section 1 : 3**.

Servicing:

Check the fuel pump operating cam and the bearing journals for wear or scoring, which would dictate renewal of the auxiliary shaft. Journal to bearing bush clearance should not exceed 0.091mm (0.0036in). If excessive clearance or surface scoring dictates renewal of the bearings, the work should be carried out by a fully equipped service station as special in-line reaming equipment is required.

1 : 11 Cylinder block

Thoroughly degrease the cylinder block and crankcase

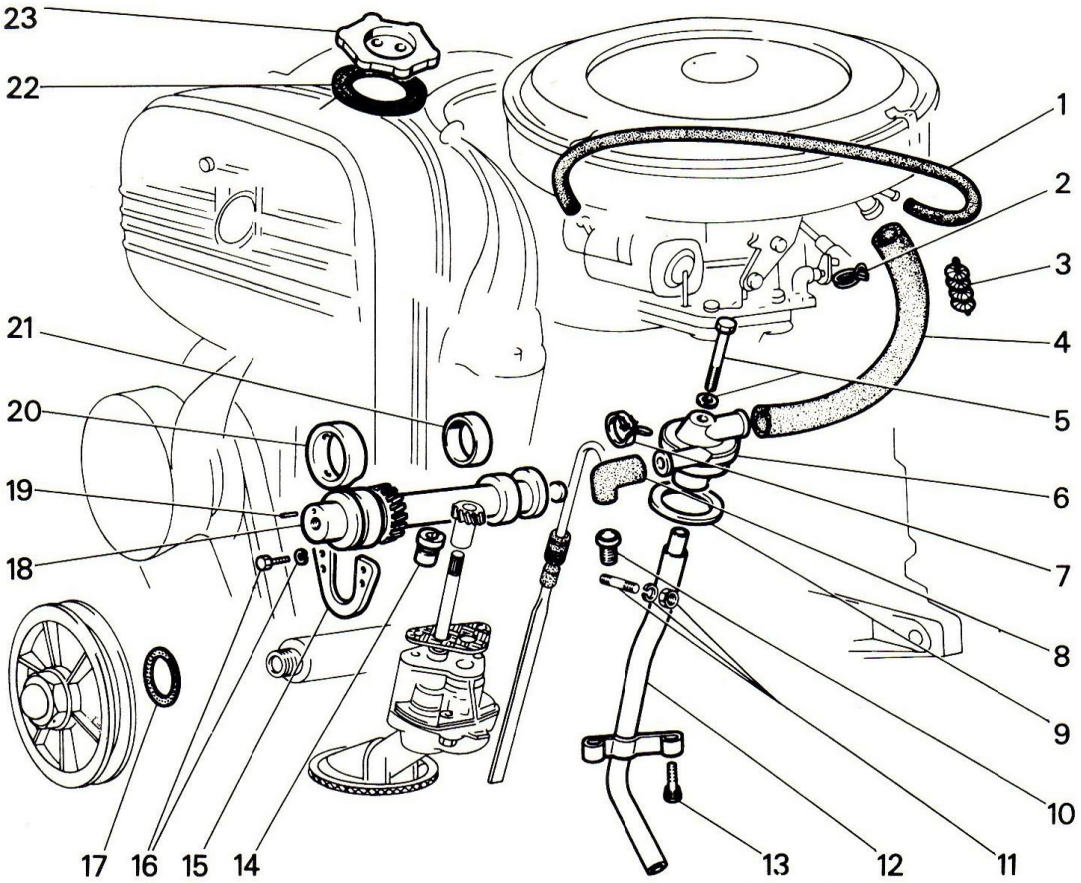

FIG 1 : 47 The oil pump and related components, OHC engines

Key to Fig 1 : 47 1 Vapour hose 2 Collar 3 Flame trap 4 Breather hose 5 Screw and washer 6 Breather 7 Collar 8 Hose 9 Breather seal 10 Vapour return connector 11 Stud, lockwasher and nut 12 Breather tube 13 Screw 14 Pump drive gear bush 15 Auxiliary shaft retaining plate 16 Screw and lockwasher 17 Spring washer 18 Auxiliary shaft 19 Locating dowel 20 Auxiliary shaft front bush 21 Auxiliary shaft rear bush 22 Seal 23 Oil filler cap

unit and blow through the oilways until they are clear. Inspect the block for any signs of cracks or other damage that would dictate renewal. Make sure that the mating surfaces on the castings are clean and free from old gasket material. Do not use sharp tools for cleaning purposes as these could damage the mating surfaces.

If the cylinder liners require reboring or renewing, the work should be entrusted to a Fiat service station as special equipment is required to carry out the work.

Use a metal straightedge laid across the mating surfaces and the top of the block to ensure that they are flat and square. If any surface is found to be out of true, regrinding by a service station will be necessary.

1 : 12 The oil pump

The oil pump and related components are shown in **FIG 1 : 46** for pushrod engines, or **FIG 1 : 47** for OHC models.

With the drive shaft downwards, clamp the oil pump in a vice fitted with padded jaws and remove the fixing bolts to separate the casing halves. Dismantle the pump into the order shown in **FIG 1 : 48**, then thoroughly clean all parts.

Refer to **FIG 1 : 49**, refit the pump gears 2 and 4 and check the clearance between the tips of the gear teeth and the inside of housing 3, using feeler gauges 1. This clearance should be 0.11 to 0.18mm (0.0043 to

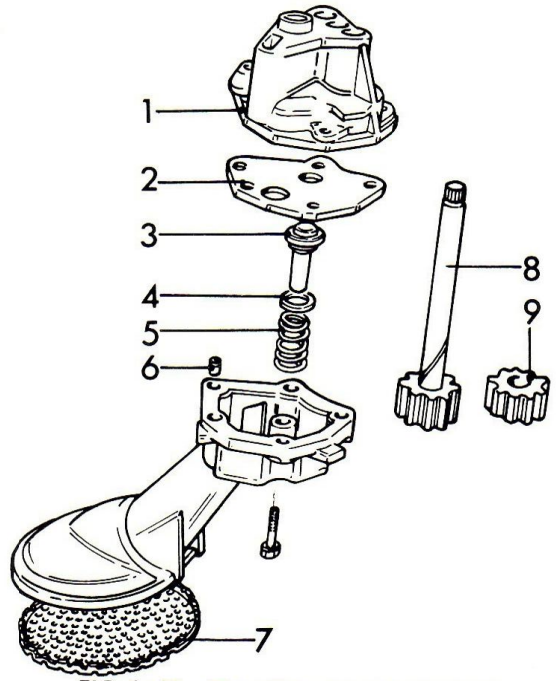

FIG 1 : 48 The oil pump components

Key to Fig 1 : 48 1 Housing 2 Plate 3 Valve 4 Washer 5 Spring 6 Locating pin 7 Filter 8 Drive shaft 9 Driven gear

place until it just contacts its seating. From this point tighten a further three-quarters of a turn by hand only. Do not overtighten the filter or oil leaks may result. A strap type tool may be used to remove the filter unit if it is too stiff to be unscrewed by hand, but never use anything but hand pressure to tighten the unit. On completion, run the engine and check for oil leaks around the filter unit and drain plug. Switch off and allow time for oil to drain down into the sump, then top up the engine oil to the correct level using 15W/40 multi-grade oil.

1:14 Reassembling the engine

Reassembly of the engine is a reversal of the dismantling procedure, noting the following points:

Use new gaskets throughout and lubricate all moving parts with engine oil during reassembly. Observe the torque wrench settings given in **Technical Data** when tightening the various fixtures.

Clean and dry the main bearing shells. Fit the shells to their respective cylinder block and cap positions as shown in **FIG 1:52**, then lightly lubricate the bearing surfaces with engine oil. Carefully fit the crankshaft into position. Make sure that the thrust rings are correctly located at the rear main bearing position as shown in **FIG 1:53**. Evenly tighten all the crankshaft bearing cap bolts and make sure that the crankshaft can rotate freely. Use a suitable dial gauge mounted at the end of the crankshaft, or feeler gauges between thrust rings and crankshaft flanges, to check crankshaft end play. This should be between 0.055 and 0.305mm (0.0021 and 0.012in). If end play is above these limits, new thrust bearings should be fitted. These are available in standard thickness or 0.127mm (0.005in) oversize.

Fit new oil seals to the front and rear cover plates. Oil the pistons before inserting them into the bores, noting that the reference number on the connecting rod faces to the left and the oil hole in the rod towards the camshaft or auxiliary shaft. Use a suitable clamp when entering the piston rings into the bores. Make sure that the big-end caps are fitted to their correct respective connecting rods, noting the reference numbers stamped on each part. Use new big-end bearing cap nuts.

When installing the oil pump to the crankcase, temporarily refit the distributor to ensure that the oil pump drive shaft is flush with the distributor drive shaft.

Tighten the sump fixing bolts diagonally to avoid distortion, making sure that the gasket is not displaced. Follow the instructions given in **Sections 1:4** and **1:7** to refit the cylinder head and timing belt. When refitting the distributor, follow the instructions given in **Chapter 3** to ensure correct ignition timing.

1:15 Refitting the engine

This operation is a reversal of the removal procedure detailed in **Section 1:2**. Refit the transmission as described in **Chapter 6** or **Chapter 7**. Observe the torque wrench settings given in **Technical Data** when tightening the various fixtures.

On completion, the sump and cooling system should be refilled and the engine started. Check the operation of the various warning lights and for water, oil and fuel leaks. Run the engine until it reaches normal operating temperature, then carry out the carburetter slow-running adjustments described in **Chapter 2**.

1:16 Fault diagnosis

(a) Engine will not start

1 Defective coil
2 Faulty distributor capacitor
3 Dirty, pitted or incorrectly set contact points
4 Ignition wires loose or insulation faulty
5 Water on spark plug leads
6 Battery discharged, corrosion of terminals
7 Faulty or jammed starter
8 Sparking plug leads wrongly connected
9 Vapour lock in fuel pipes
10 Defective fuel pump
11 Overchoking or underchoking
12 Blocked fuel filter or carburetter jet
13 Leaking valves
14 Sticking valves
15 Valve timing incorrect
16 Ignition timing incorrect

(b) Engine stalls

1 Check 1, 2, 3, 4, 5, 10, 11, 12, 13 and 14 in (a)
2 Sparking plugs defective or gaps incorrect
3 Retarded ignition
4 Mixture too weak
5 Water in fuel system
6 Petrol tank vent blocked
7 Incorrect valve clearances

(c) Engine idles badly

1. Check 2 and 7 in (b)
2 Air leak at manifold joints
3 Carburetter adjustment wrong
4 Air leak in carburetter
5 Over-rich mixture
6 Worn piston rings
7 Worn valve stems or guides
8 Weak exhaust valve springs

(d) Engine misfires

1 Check 1, 2, 3, 4, 5, 8, 10, 12, 13, 14, 15 and 16 in (a)
2 Weak or broken valve springs

(e) Engine overheats (see **Chapter 4**)

(f) Compression low

1 Check 13 and 14 in (a); 6 and 7 in (c); and 2 in (d)
2 Worn piston ring grooves
3 Scored or worn cylinder bores

(g) Engine lacks power

1 Check 3, 10, 11, 12, 13, 14, 15 and 16 in (a); 2, 3, 4 and 7 in (b); 6 and 7 in (c); and 2 in (d). Also check (e) and (f)
2 Leaking joint washers or gaskets
3 Fouled sparking plugs
4 Automatic advance not working

(h) Burned valves or seats

1 Check 13 and 14 in (a); 7 in (b); and 2 in (d). Also check (e)
2 Excessive carbon round valve seats and head

(j) Sticking valves

1 Check 2 in (d)
2 Bent valve stem
3 Scored valve stem or guide
4 Incorrect valve clearances

(k) Excessive cylinder wear

1 Check 11 in (a)
2 Lack of oil
3 Dirty oil
4 Piston rings gummed up or broken
5 Badly fitting piston rings
6 Connecting rod bent

(l) Excessive oil consumption

1 Check 6 and 7 in (c); and check (k)
2 Ring gaps too wide
3 Oil return holes in piston choked with carbon
4 Scored cylinders
5 Oil level too high
6 External oil leaks

(m) Crankshaft and connecting rod bearing failure

1 Check 2 in (k)
2 Restricted oilways
3 Worn journals or crankpins
4 Loose bearing caps
5 Extremely low oil pressure
6 Bent connecting rod

(n) Engine vibration

1 Loose alternator or other belt driven component
2 Engine mountings loose or defective
3 Misfiring due to mixture, ignition or mechanical faults

CHAPTER 2
THE FUEL SYSTEM

2:1 Description
2:2 Routine maintenance
2:3 Air cleaner
2:4 Fuel pump
2:5 Slow-running adjustments
2:6 Carburetter removal and servicing
2:7 Emission control systems
2:8 Fault diagnosis

2:1 Description

Fuel from the rear mounted tank is supplied to the carburetter by a mechanical type fuel pump on pushrod engines, the pump being operated by an eccentric on the engine camshaft. On OHC engines, an electric fuel pump is fitted and a shut-off relay and pressure regulator is incorporated.

Weber 32 ADF twin-barrel downdraught carburetters equipped with automatic choke units are fitted to most models with minor variations to suit different engines and markets. Solex C32 TEIE carburetters, which are very similar to the Weber, may also be fitted as an alternative on most engines. On 2000 engines a Weber 34 ADF carburetter is used, which is an enlarged version of the type fitted to the smaller engines. Details of carburetter types, jet sizes and settings are given in the **Technical Data** in the **Appendix**.

All models are fitted with paper element type air filter units, the element being mounted in a metal case attached to the carburetter air intake.

2:2 Routine maintenance

At 10,000km (6000 mile) or 6 monthly intervals, the air cleaner element should be renewed and the fuel pump filter removed and cleaned. These procedures are described in **Sections 2:3** and **2:4**.

On overhead camshaft engines a disposable element in-line filter is used and this should be renewed at yearly intervals. One type of in-line filter is shown in **FIG 2:1** and element removal is effected by pressing down the lever 3 so that the bowl can be removed from the top cover 1 and the element 2 withdrawn. Clean the glass bowl, insert the new element and clip the bowl back in position.

Another type of in-line filter is a screw-in cartridge similar to a small oil filter canister. It is removed by unscrewing from the housing and a new element screwed in.

A third type of filter is simply inserted in the fuel feed hose line. To remove, loosen the two hose clamps and pull the hoses off the unions. Refit in the reverse order, being careful to ensure that the arrow on the casing is pointing in the direction of fuel flow.

Both the Weber and Solex carburetters have an extra fuel filter located behind a hexagonal plug at the fuel inlet.

2:3 Air cleaner

Filter element renewal:

Remove the three nuts and detach the air cleaner cover, then lift out and discard the old filter element. Wipe clean the inside of the air cleaner casing and cover, then reassemble the unit using a new filter element. On 1800 models, position the cover according to the reference marks to suit prevailing summer or winter conditions.

Air cleaner removal:

Remove the cover and filter element as described previously. Remove the nuts securing the air cleaner casing to the carburetter, then detach the hoses and lift the unit from the car. It is a good plan to use pieces of clean rag to cover the air intakes of the carburetter when removing the air cleaner casing, to avoid dropping the fixing nuts and washers into the carburetter, and to prevent the entry of dirt.

Refitting is a reversal of the removal procedure.

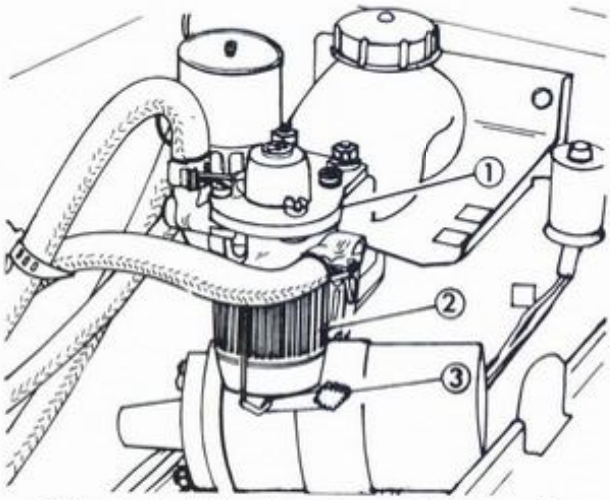

FIG 2 : 1 Fuel filter element removal, OHC models

2 : 4 Fuel pump

Pushrod engines :

The fuel pump is mounted on the lefthand side of the engine, the components being shown in **FIG 2 : 2**. Note that the filter element is accessible for cleaning without the need for pump removal.

Testing fuel pump :

Before testing the pump, ensure that the fuel tank vent system is not blocked. To check for a blocked vent system, listen for an inrush of air as the fuel filler cap is removed, which would indicate a vacuum in the fuel tank. If the vent system is clear and it is suspected that fuel is not reaching the carburetter, disconnect the carburetter feed pipe and hold a suitable container under the end of the pipe. Turn the engine over a few times with the starter and watch for fuel squirting from the end of the pipe, which indicates that the pump is working. If so, check the float needle in the carburetter for possible sticking.

Reduced fuel flow can be caused by blocked fuel pipes or a clogged filter. If an obstructed pipeline appears to be the cause of the trouble, it may be cleared with compressed air. Disconnect the pipeline at the pump and carburetter. **Do not pass compressed air through the pump or the valves will be damaged.** Do not use compressed air to clear pipes between pump and tank on USA export models, as these are equipped with a sealed fuel tank venting system and components may be damaged. Such faults should be referred to a fully equipped service station. On other models, if there is an obstruction between the pump and the tank, remove the tank filler cap before blowing the pipe through from the pump end.

If the pump delivers insufficient fuel, suspect an air leak between the pump and the tank, dirt under the pump valves or faulty valve seatings. If no fuel is delivered, a sticking valve or faulty pump diaphragm are likely causes.

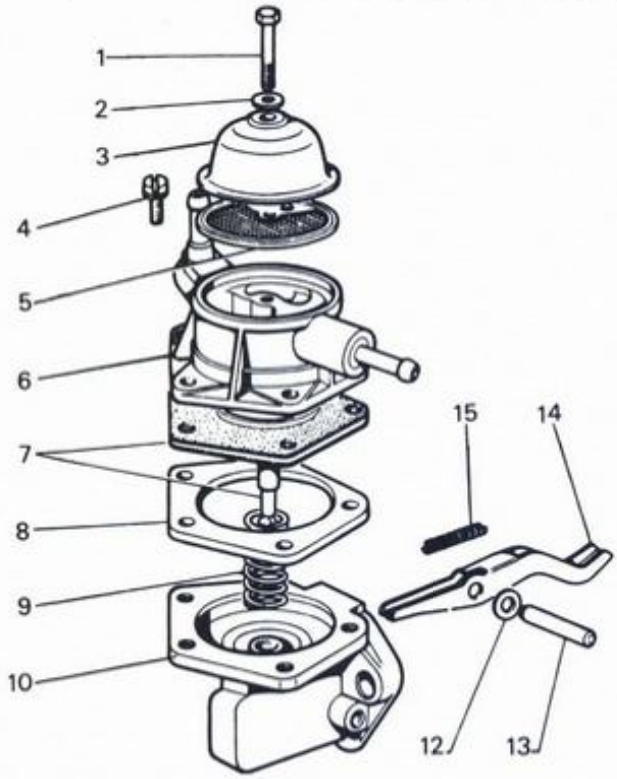

FIG 2 : 2 Fuel pump components, pushrod models

Key to Fig 2 : 2 1 Fixing screw 2 Washer 3 Cover 4 Screw 5 Filter 6 Upper body 7 Diaphragm 8 Spacer 9 Spring 10 Lower body 12 Washer 13 Pivot pin 14 Operating lever 15 Lever return spring

Filter cleaning :

Refer to **FIG 2 : 2**. Remove screw 1 and lift off cover 3 complete with seal and sealing washer 2. It may be necessary to disconnect the supply line to the pump and plug it so that fuel does not siphon through. Lift off filter 5 and wash it in clean petrol. Wash or carefully scrape any sediment from the bowl in the fuel pump. Dry the filter with compressed air and check the gauze is unbroken. Renew the filter element if it is damaged or will not clean up properly. Carefully check the seals and renew them if not in good condition. Refit the components in the reverse order of removal. Tighten screw 1 until the cover is very lightly secured, then partially rotate the cover to ensure that it is fully and squarely seated before fully tightening the screw.

Fuel pump removal :

Disconnect the two fuel pipes, plugging the pipe leading from the tank to avoid loss of fuel. Unscrew the two bolts or nuts securing the pump to the crankcase and lift off, collecting the flange gasket.

Servicing :

Refer to **FIG 2 : 2**. Remove screw 1 and detach cover 3 and filter 5. Remove screws 4 and separate the pump upper and lower bodies. Unhook diaphragm pushrod 7 from operating lever 14. If necessary, remove pin 13 and detach the operating lever.

Wash all parts in petrol and make sure that all sediment is removed from the filter gauze and pump body. Examine the diaphragm for any signs of cracking or hardening and check that the diaphragm and operating lever return springs are not weak or deformed. Renew any defective parts. Note that if either of the valves in the

pump upper body is defective, the body assembly must be renewed. The valves can be checked by blowing and sucking at the fuel pipe connections on the pump body. It should be possible to blow air in the fuel inlet but not suck air out, and to suck air out of the pump outlet but not to blow air in.

Reassemble the pump in the reverse order of dismantling. Tighten screws 4 lightly at first, then operate lever 14 to move it to its central position and hold in place while fully tightening the screws. This will correctly centralise the diaphragm.

Refitting:

This is a reversal of the removal procedure, using new gaskets. Lightly smear the gaskets with grease before fitting. When installing the pump, make sure that the operating lever rides correctly on the cam in the engine. Tighten the pump fixings alternately and evenly to avoid flange distortion. Reconnect the fuel pipes, then start the engine and check for fuel leaks.

Overhead camshaft engines:

The electric fuel pump used with these engines is mounted at the rear of the car adjacent to the fuel tank. The pump is not suitable for home servicing and, in the event of faulty operation, should be removed for expert attention or renewal.

Disconnect the battery and the feed wire to the pump. Loosen the two hose clamps and pull off the hoses. Unscrew the two mounting nuts and the earth lead nut, then withdraw the pump unit from the insulator panel. Refit in the reverse order and check for leaks.

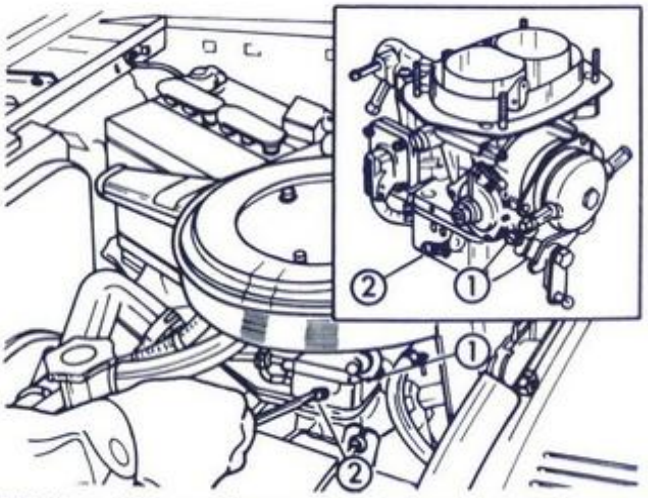

FIG 2:3 Idle speed screw 1 and mixture screw 2, push-rod engines, with Weber carburetter

2:5 Slow-running adjustments

Slow-running adjustments should be carried out after any ignition system or valve clearance adjustments or servicing have been carried out, or at any time if engine idle speed is incorrect or if idle is rough or unreliable. Note that carburetter adjustments will only be effective if the sparking plugs and ignition system are

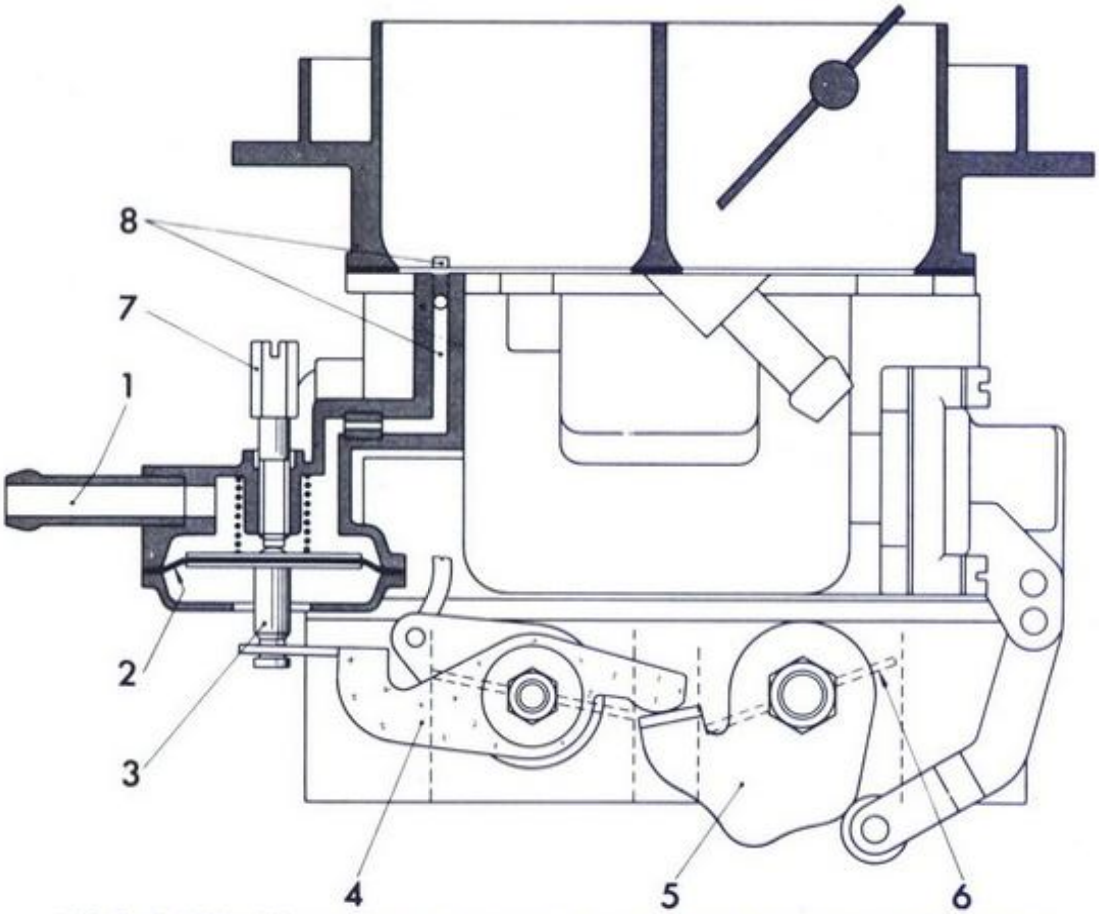

FIG 2:4 Weber idle speed compensator on models equipped with air conditioning systems

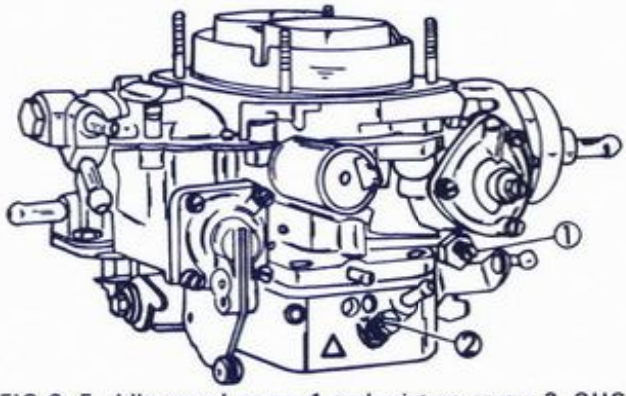

FIG 2 : 5 Idle speed screw 1 and mixture screw 2, OHC models

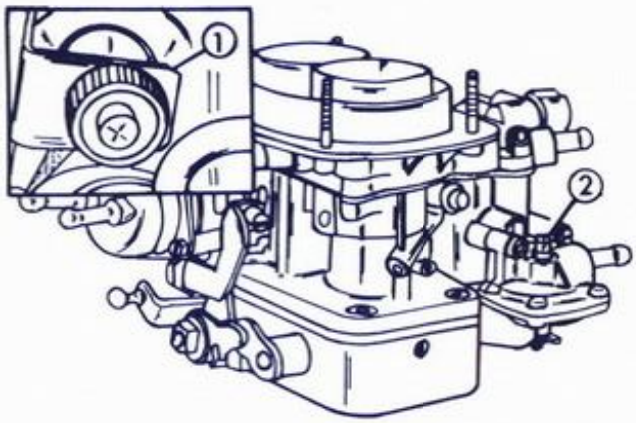

FIG 2 : 6 Emission control button 1 and fast-idle adjustment screw 2, OHC models

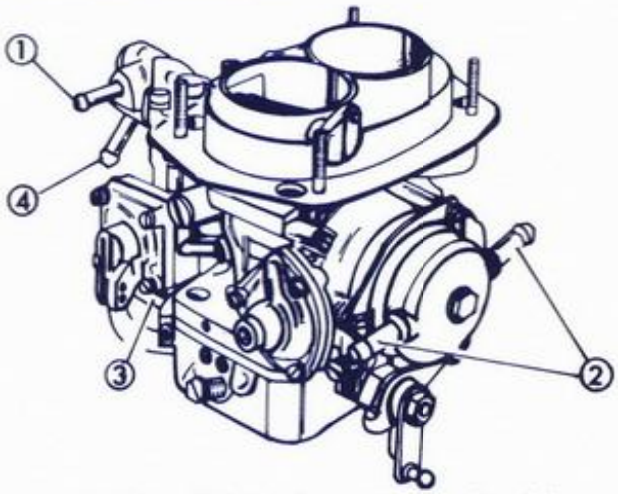

FIG 2 : 7 Weber carburetter, pushrod models

Key to Fig 2 : 7 1 Fuel overflow pipe union 2 Coolant circulation pipe unions 3 Crankcase breather pipe union 4 Fuel feed pipe union

in good order and the valve clearances are correctly set. The engine must be run until it reaches normal operating temperature before commencing the adjustment procedure. On later cars the mixture screw is sealed with a plastic cap; this should only be removed if a satisfactory idle cannot be obtained by the use of the idle speed screw alone.

If poor running qualities are traced to the carburetter and the appropriate adjustment procedures do not cure the fault, the unit must be removed for checking and servicing as described in **Section 2 : 6**. If faulty operation of the automatic choke unit is suspected, special tools and gauge equipment will be required.

Note that an accurate tachometer, connected in accordance with manufacturers instructions, will be needed to set the idle speed accurately. When idle speed and mixture adjustments have been completed, the CO (carbon monoxide) content of the exhaust gas must be checked, then further fine adjustments made as necessary to bring CO content to within legal limits. If suitable analytical equipment is not available, the car should be taken to a service station for a final check on CO content to be made.

Pushrod engines :

Weber slow-running adjustment :

The engine must be at normal operating temperature and the air cleaner in position. **FIG 2 : 3** shows the idle speed adjustment screw 1 and idle mixture adjustment screw 2.

Start the engine and allow it to idle. Adjust screw 1 to obtain an engine speed of 800 ± 50r/min, then adjust screw 2 to obtain the fastest possible idling speed under these conditions. Readjust screw 1 to correct the idle speed, then make a further fine adjustment to screw 2, if necessary, to obtain the smoothest possible idle.

On models fitted with automatic transmission, apply the footbrake and select **D** to check that the engine does not hesitate or stall when drive is engaged. If so, raise the idle speed a little as necessary by making further adjustments to idle speed screw 1.

On models fitted with air conditioning (refrigeration) systems, the carburetter is fitted with a vacuum operated device which increases engine idle speed to compensate for the additional load when the system is in operation (see **FIG 2 : 4**).

When the air conditioning system is switched on, a motorised valve is actuated which allows vacuum from the engine inlet manifold to act at connecting tube 1. This vacuum pulls diaphragm 2 connected to rod 3 upwards, this movement being transmitted through levers 4 and 5 to the primary throttle butterfly 6. The additional opening of the butterfly increases engine power slightly to compensate for the additional load imposed by the air conditioning system compressor. The amount of throttle opening is adjusted by means of screw 7 which controls movement of diaphragm 2. When the air conditioning system is switched off, the motorised valve closes the vacuum passage to pipe 1 and diaphragm 2 returns to the rest position under spring pressure.

When engine idle speed has been correctly set as described previously, switch on the air conditioning system and check that the idle speed is maintained correctly. If not, leave the air conditioning system in operation while making fine adjustments to screw 7.

Overhead camshaft engines :

Slow-running adjustment :

Make sure the engine is at normal operating temperature. **FIG 2 : 5** shows the carburetter idle speed adjustment screw 1 and idle mixture adjustment screw 2. For

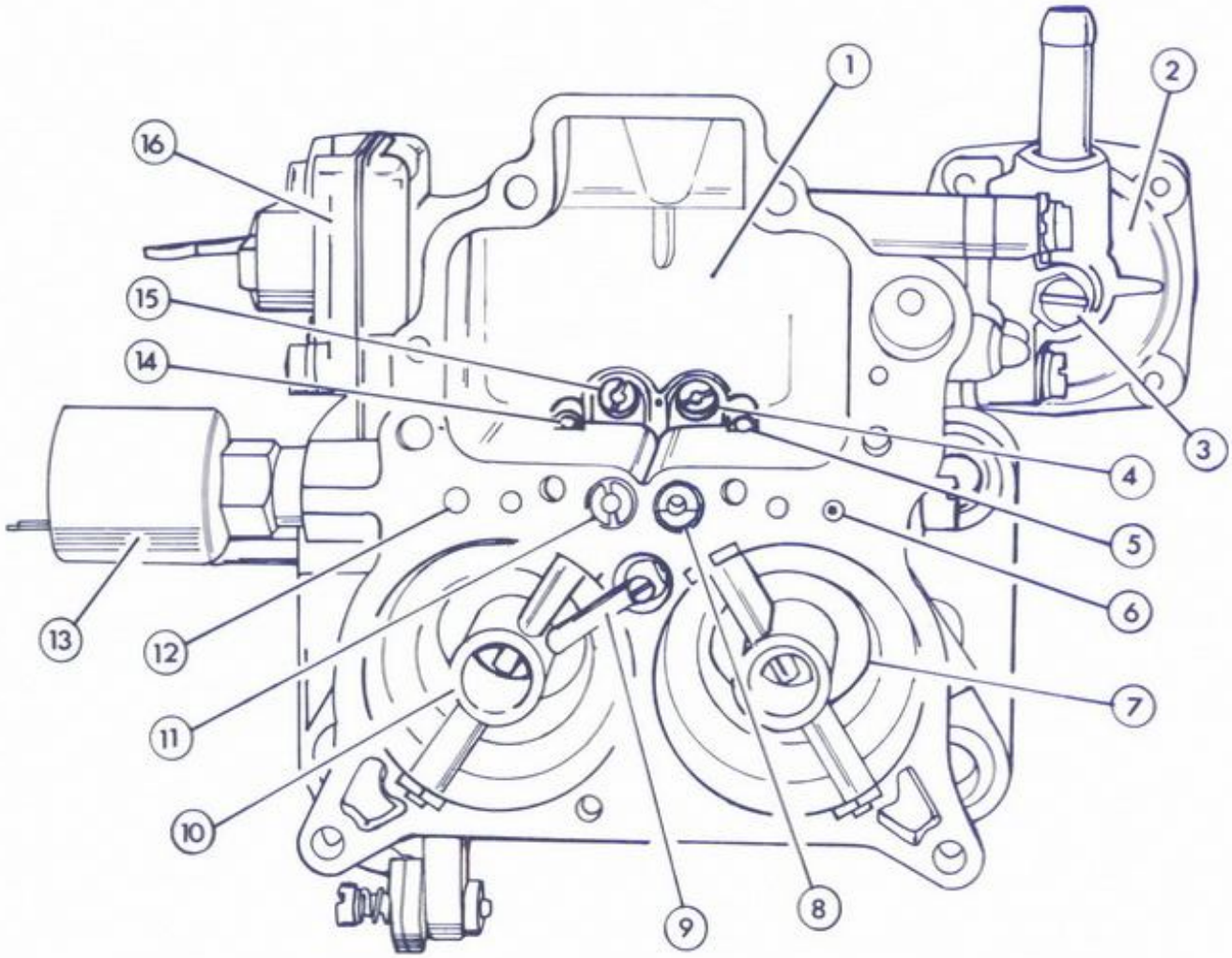

FIG 2:8 Weber carburetter with top cover removed

Key to Fig 2:8 1 Float chamber 2 Fast-idle diaphragm assembly 3 Fast-idle adjustment screw 4 Secondary main jet 5 High speed gas inlet 6 High speed air passage 7 Secondary venturi 8 Secondary air correction jet 9 Accelerator pump nozzle 10 Primary venturi 11 Primary air correction jet 12 High speed air passage 13 Idle shut-off solenoid 14 High speed gas inlet 15 Primary main jet 16 Accelerator pump housing

clarity, the illustration shows the carburetter removed from the engine and the air cleaner assembly detached.

On models fitted with manual transmission, start the engine and allow it to idle in neutral. On models fitted with automatic transmission, slow-running adjustments must be carried out with the engine idling and the selector lever in the **D** (Drive) position. In this case, either apply the handbrake fully and firmly chock the front wheels against rotation or, preferably, have an assistant firmly apply the brake pedal.

On manual transmission models, idle speed should be set to 850 ± 50r/min on cars with standard exhaust, or 800 to 850r/min on cars fitted with a catalytic converter. On all automatic transmission models, idle speed should be set to 700 to 750r/min.

Adjust idle speed screw 1 (see **FIG 2:5**) until the correct engine idle speed is obtained, then adjust idle mixture screw 2 to obtain the fastest possible idle under these conditions. Now return the idle speed to the correct figure by readjusting screw 1. Make further fine adjustments to screw 2 if necessary to obtain a smooth idle and a final adjustment to screw 1 to correct idle speed.

When a smooth idle at the correct speed has been obtained, check the CO reading and readjust the idle mixture and speed screws to obtain the best balance between idle speed and CO reading. On models with standard exhaust systems CO content should be 0.5 ± 0.2 per cent for manual transmission models, 0.7 ± 0.2 per cent for automatic transmission models. When a catalytic converter is fitted, CO content should be 3.0 ± 0.5 per cent for both manual and automatic transmission models.

Fast-idle adjustment:

With the gearlever in the neutral position, start the engine and allow it to idle. Refer to **FIG 2:6** and depress and hold emission control button 1. Accelerate the engine to approximately 2000r/min, then allow the engine to return to idle. The fast-idle speed obtained under these conditions should be 1600 ± 50r/min for manual transmission models, or 1300 ± 50r/min for automatic transmission models. If the fast-idle speed is outside limits,

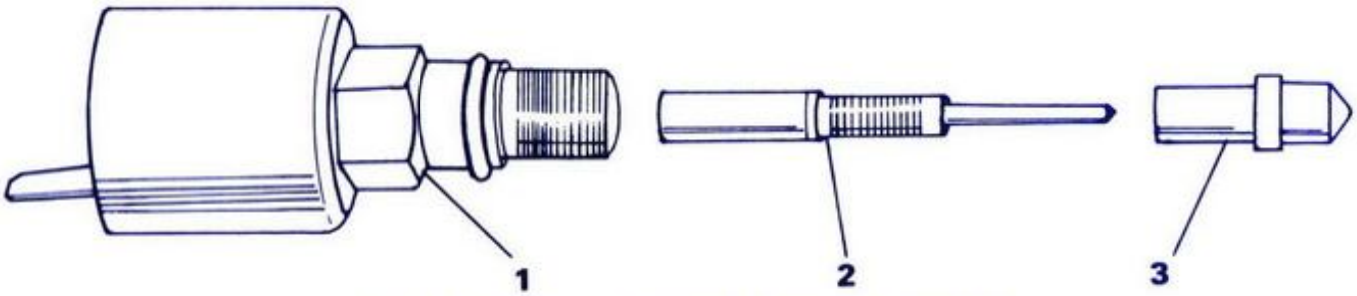

FIG 2:9 Idle shut-off solenoid 1, plunger 2 and idle jet 3

adjust by turning fast-idle adjustment screw 2.

Models fitted with air conditioning (refrigeration) systems are provided with an idle speed compensator on the carburetter as shown in **FIG 2:4**. Operation and adjustment of this device is carried out in the same manner as previously described.

2:6 Carburetter removal and servicing

If poor running qualities are traced to the carburetter and the adjustment procedures described in **Section 2:5** do not cure the fault, the unit should be removed and the top cover detached so that the float mechanism can be checked and the float chamber, jets and passages cleaned. If these servicing procedures do not cure carburetter faults, further checks on carburetter sub-assemblies and the automatic choke unit should be carried out at a service station. On USA export models, a check should be made on emission control system components at the same time.

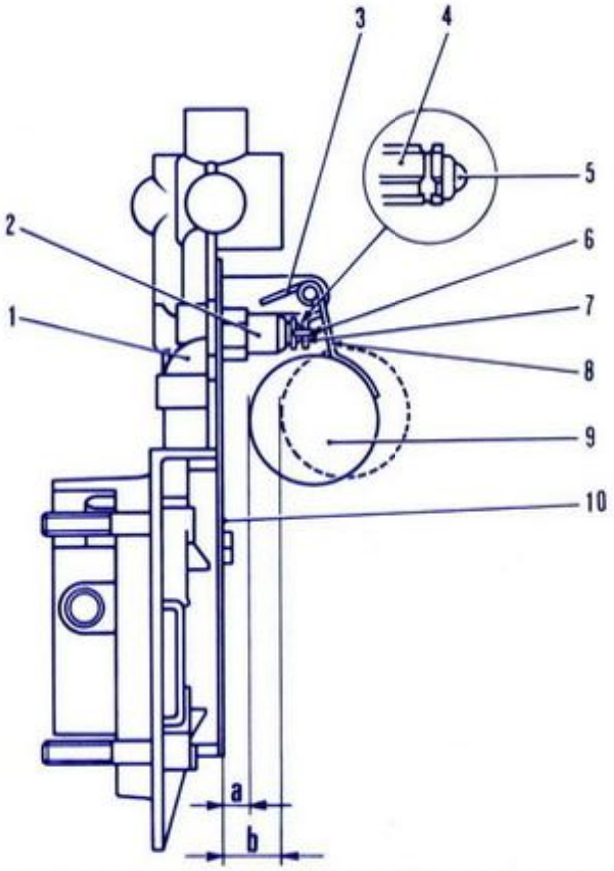

FIG 2:10 Checking float level on Weber carburetter

Key to Fig 2:10 1 Carburetter cover 2 Needle valve 3 Float lug 4 Needle 5 Movable ball 6 Return hook 7 Tongue 8 Float arm 9 Float 10 Gasket

Carburetter removal:

Remove the air cleaner assembly as described in **Section 2:3**. Disconnect the accelerator linkage from the carburetter lever and the two water hoses from the automatic choke unit. Disconnect the fuel and vacuum pipes, noting the position of each pipe so that it can be reconnected correctly. Plug the fuel and water hoses to prevent leakage and the entry of dirt. Remove the four nuts securing the carburetter flange to the inlet manifold then lift off the carburetter and gasket.

Refitting is a reversal of the removal procedure, using a new flange gasket. Tighten the carburetter mounting nuts alternately and evenly to avoid distortion of the flange. On completion, start the engine and check for fuel or water leaks at the hose connections and check for correct coolant level as described in **Chapter 4**. If necessary, carry out the slow-running adjustments described in **Section 2:5**.

Weber carburetter servicing:

A typical carburetter for overhead camshaft engines is shown in **FIG 2:5**, while **FIG 2:7** shows the type fitted to pushrod engines.

Remove the fixing screws and detach the top cover assembly from the carburetter body, taking care not to damage the float mechanism which remains connected to the top cover. Empty the fuel from the carburetter float chamber into a suitable container. Remove and discard the cover gasket.

The locations of jets and passages in the body of a typical carburetter are shown in **FIG 2:8**. The unit illustrated is that fitted to OHC models, the components of the idle shut-off solenoid fitted to such units being shown at 13, the individual components being shown in **FIG 2:9**. Layout of internal components on carburetters fitted to pushrod engine models is similar, although an idle shut-off valve is not used.

Carefully remove the jets, noting the position of each as it is removed so that it can be refitted correctly in its original position. Clean all jets and passages using only clean petrol, compressed air or a tyre pump, and a small brush for cleaning purposes. **Do not use cloth or a wire probe.**

Unscrew and remove the hexagonal plug from the fuel inlet casting and carefully remove the wire gauze filter. Wash the filter in clean petrol. Renew the filter if it is damaged or will not clean up properly. Carefully refit the filter, then fit and tighten the plug.

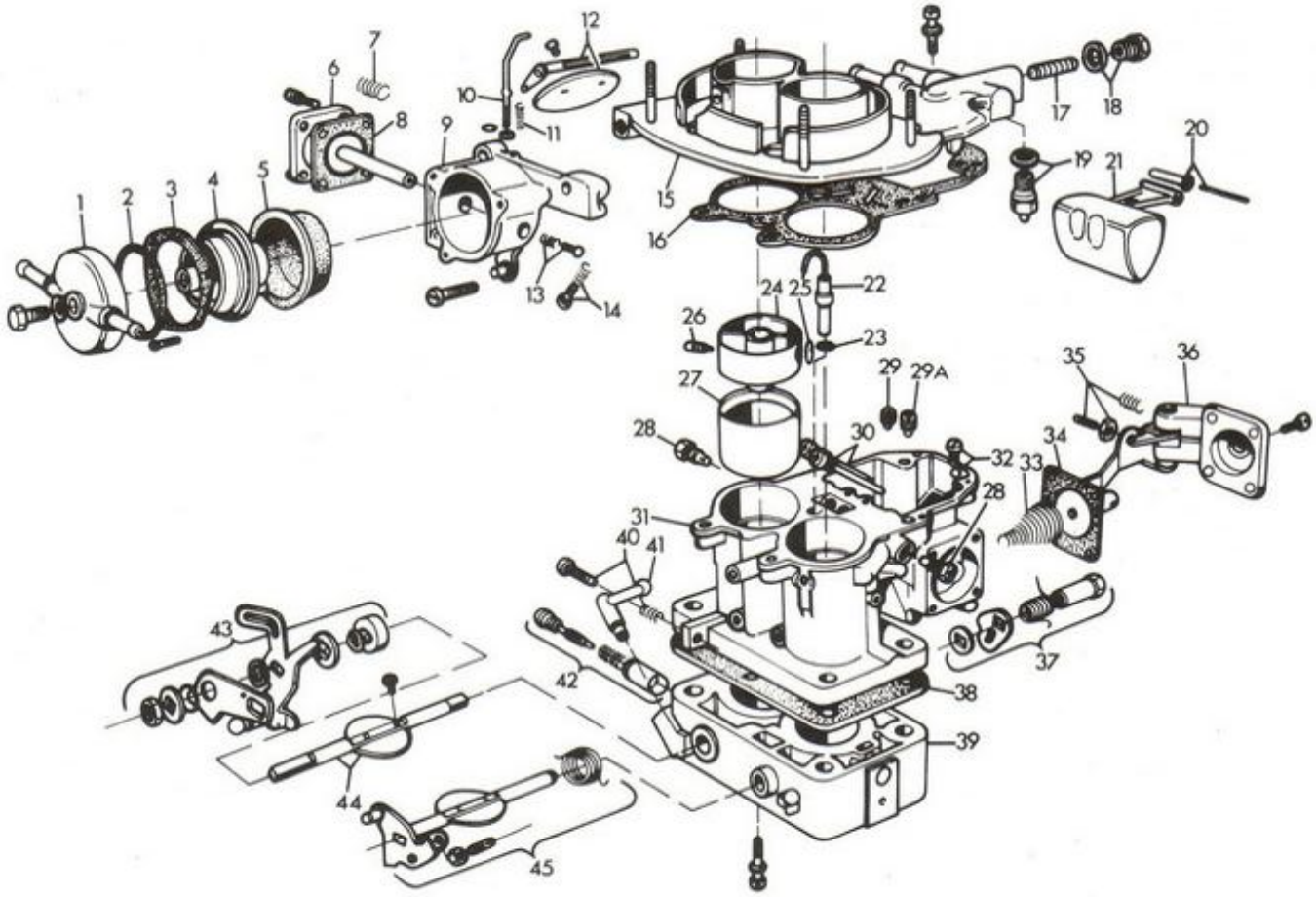

FIG 2 : 11 Solex carburetter components

Key to Fig 2 : 11 1 Automatic choke housing 2 Gasket 3 Retaining plate 4 Thermostatic control spring unit 5 Cover 6 Diaphragm coverplate 7 Spring 8 Automatic choke diaphragm unit 9 Automatic choke body 10 Link 11 Spring 12 Choke plate and spindle 13 Screw and spring 14 Screw and spring 15 Top cover 16 Gasket 17 Filter 18 Plug and washer 19 Needle valve and washer 20 Float pivot and pin 21 Float 22 Pump injector 23 Seal 24 Auxiliary venturi 25 Washer 26 Screw 27 Main venturi 28 Slow-running jets 29 main jets 30 Emulsion tubes and air correction jets 31 Carburetter body 32 Pump ball valve 33 Spring 34 Accelerator pump diaphragm unit 35 Spring, nut and washer 36 Pump cover and lever 37 Spindle nut, spring and cam 38 Insulator 39 Base unit 40 Idle speed screw and spring 41 Adaptor elbow 42 Mixture screw, spring and sleeve 43 Throttle/accelerator linkage 44 Primary throttle plate and spindle 45 Secondary throttle plate and spindle

Carefully detach the hinge pin to remove the float from the carburetter top cover. Check the float for leaks by immersing it in hot water and looking for a stream of air bubbles. Leaks can also be detected by shaking the float and listening for fuel splash inside. If the float has a leak or is damaged in any other way it should be renewed. Unscrew and remove the needle valve assembly, which is shown at 2 in **FIG 2:10**. If a washer is used between valve body and top cover, this must be retained for correct refitting as it governs the fuel level. Check the assembly for wear or damage and inspect the tapered seat of the needle for any sign of a ridge. Renew the assembly complete if any faults are found. Install the needle valve assembly, with sealing washer if fitted, then install the float and make sure that it can move freely on its hinge pin.

Checking float level:

Refer to **FIG 2:10**. Fit a new gasket 10 on to the top cover and hold the assembly vertically as shown in the illustration. Allow the float to rest lightly against the ball tip 5 of the needle valve assembly. Check that dimension **a** is 6mm, using a suitable drill or bar of the correct diameter placed across the gasket surface. If necessary, correct the float level by carefully bending the small tongue 7 which contacts the needle valve. Now hold the top cover in its normal attitude and allow the float to hang free. Measure dimension **b**, which should be 14mm. If incorrect, adjust by carefully bending float lug 3.

Reassemble the carburetter in the reverse order of dismantling, using the new gasket. Tighten the top cover screws alternately and evenly to avoid distortion.

Solex carburetter:

The Solex C32 TEIE/42 carburetter, as shown in **FIG 2:11**, is of similar construction and operation to the Weber unit, also having an automatic choke. Adjustments and servicing procedures are similar to those given for the Weber.

To carry out slow-running adjustments, refer to **FIG 2:11** and **Section 2:5**. To remove, refit and service the carburetter, refer to **FIG 2:11** and the details given earlier

in this section. However, there are slight differences on the Solex. The main carburetter body is detachable from the base unit. After first removing the accelerator pump and auxiliary venturi, the main venturi may be removed.

Checking float level :

The float level should be checked using the method shown in **FIG 2 : 10** as follows :

With the gasket fitted in position on the top cover, hold the cover **horizontally** and press the float gently down so that the ball of the needle valve moves fully into the valve. Under these conditions, dimension **a** should be between 6.5 and 7.5mm on the C32 TEIE/42 carburetter or between 9 and 10mm on carburetters with the suffix /1 or /2.

2 : 7 Emission control systems

A number of devices are available for use on these cars to bring the level of noxious fumes emitted to within the limits imposed by regulations in various market territories. These are described briefly in this section, but not all the systems mentioned are necessarily fitted to any car since the limits imposed vary in different territories.

Crankcase ventilation :

Irrespective of intended market area, all of these cars are fitted with a positive crankcase ventilation (PCV) system the purpose of which is to channel all crankcase vapours to the carburetter and air cleaner. In this way the vapours are drawn back into the engine for burning in the normal combustion process instead of escaping into the atmosphere.

An oil/vapour separator unit is mounted low down on the side of the engine block, with a pipe leading into the upper part of the crankcase through which the oil fumes are extracted using the depression in the carburetter. Liquid oil is separated and falls back into the sump. The vapours continue up to the carburetter air cleaner where a control valve, according to engine speed, bypasses a quantity of the oil vapour directly into the body of the carburetter ; the remainder is mixed with the intake air. A flame trap is inserted near the top end of the hose to prevent a back-fire from reaching the crankcase.

At intervals of 20,000km (12,000 miles) the oil separator should be removed for cleaning. This is secured by a single central bolt. Clean also the hoses in the system and the flame trap at the hose junction with the carburetter air cleaner.

Air injection system :

In this system an air pump, driven by a belt from the exhaust camshaft, pumps a continuous flow of fresh air to each of the four exhaust ports. This air mixes with the burning exhaust gases issuing from the combustion chambers and helps to reduce the carbon monoxide and hydrocarbon in the exhaust.

Included in the system are a diverter or relief valve and a check or non-return valve. The diverter valve, actuated by the depression in the inlet manifold, allows excess air to pass out into the atmosphere as during periods of deceleration. The check valve, which includes a spring-loaded diaphragm, protects the pump from back pressure as might be experienced in the event of a pump drive belt failure.

At about yearly intervals the components in the air injection system should be checked and cleaned. The air pump is easily removed after removing the timing belt cover and the pump drive belt ; remove the hose from the rear of the pump, unscrew the securing nuts and bolts and lift off the pump. Note, when refitting the pump, that no provision is made for tensioning the belt, so this must be renewed if it has stretched.

The check valve is mounted vertically above the air manifold and is removed by unscrewing after disconnecting the air hose. The operation of the valve can be checked by blowing through by mouth : air must pass freely from the hose connection side but not in the reverse direction. No adjustment is possible, so a defective valve must be renewed.

- The diverter/relief valve assembly and the electro-valve are mounted on a bracket above the mounting for the righthand strut. Removal is easily carried out after disconnecting two electrical leads and the hose attachments.

Exhaust Gas Recirculation (EGR) :

In this system a metered amount of exhaust gas is passed from the exhaust manifold to the inlet manifold for mixing with the ingoing fuel/air mixture in order to lower the combustion temperatures in the engine and so reduce the nitrogen oxides in the exhaust. In order that the efficiency of the engine should not be affected when cold or under load, the opening of the EGR valve which regulates the amount of exhaust gases admitted is controlled by a thermo-valve and a vacuum valve.

The vacuum in the inlet manifold is used to operate the EGR valve subject to the control of the thermo-valve and the vacuum valve. The thermo-valve, sensing the engine temperature, closes the vacuum passage to the EGR valve when the engine is cold and the vacuum valve is opened only at the pre-determined values of depression in the inlet manifold.

At approximately two-year intervals the system should be cleaned and a warning device is included whereby the driver is informed that the allotted mileage has been covered and servicing is due : this is operated from the speedometer.

To remove the EGR valve for cleaning, loosen the clamp and remove the hose from the valve which is mounted on the inlet camshaft cover. Detach the metal pipe union and remove the bolt retaining the pipe support on the exhaust camshaft cover. Remove the two mounting bolts and lift off the EGR valve.

Fuel evaporative control system :

The purpose of this system is to prevent the petrol fumes in the fuel tank from escaping to atmosphere. The principle of operations is briefly as follows :

The fuel tank is sealed but a vent pipe passes from the tank to a canister fitted with activated charcoal in the engine compartment. A three-way valve included in this vent line ensures that sufficient air is admitted to compensate for the consumption of fuel from the tank and also to vent the system if a complete blockage occurs.

When the petrol fumes reach the charcoal canister they are adsorbed by the charcoal and remain so until the engine is started. When the engine is running, air is drawn through the canister by way of a pipe to the inlet manifold and, in passing over the charcoal in the canister, picks up

any fuel vapours collected on the charcoal fitting. Thus, the charcoal is purged and ready for the process to be repeated.

A third pipe to the canister leads from the carburetter float chamber from which it takes any fuel fumes.

At intervals of 40,000km (24,000 miles), the carbon canister should be renewed. Disconnect the three hoses to the canister, noting their positions for correct refitting, remove the two mounting bolts and lift off the canister. The new canister is fitted in the reverse order.

Catalytic converter :

This is a device used on some USA models to reduce the quantity of hydrocarbon and carbon monoxide in the exhaust. It operates by using the chemical reaction between the hot exhaust gases and the treated ceramic pellets with which the converter is fitted.

The converter, in appearance, is like an extra silencer in the exhaust pipe and should be renewed every 40,000km (24,000 miles) or at 2-yearly intervals. A switch, operated by an odometer device in the speedometer drive, actuates a 'Catalyst' warning lamp on the facia panel when the appropriate mileage for renewal has been reached.

Since the catalytic converter becomes very hot in use, two devices are fitted to ensure that overheating does not occur. The first is a switch coupled to the ignition system which actuates a fuel shut-off valve when the engine speed rises above approximately 2700r/min. The second is a thermo-switch attached to the converter which lights up a warning lamp on the facia panel if the temperature rises above 980°C (1800°F): this is a flashing warning which flashes faster as the temperature rises.

2:8 Fault diagnosis

(a) Leakage or insufficient fuel delivered

1 Air vent to tank restricted
2 Fuel pipes blocked
3 Air leaks at pipe connections
4 Fuel filter blocked
5 Pump gaskets faulty
6 Pump diaphragm defective
7 Pump valve sticking or seating badly

(b) Excessive fuel consumption

1 Carburetter requires adjustment
2 Fuel leakage
3 Sticking choke unit
4 Float level too high
5 Dirty air cleaner
6 Excessive engine temperature
7 Brakes binding
8 Idling speed too high

(c) Idling speed too high

1 Incorrect idle speed adjustment
2 Rich fuel mixture
3 Throttle control sticking
4 Choke unit sticking
5 Worn throttle valves or shafts

(d) Noisy fuel pump

1 Loose pump mountings
2 Air leaks on suction side of diaphragm
3 Obstruction in fuel pipeline
4 Clogged fuel filter

(e) No fuel delivery

1 Float needle valve stuck
2 Tank vent blocked
3 Pump diaphragm defective
4 Pump valve stuck
5 Pipeline obstructed
6 Bad air leak on suction side of pump
7 Idle shut-off valve inoperative (if fitted)

NOTES

CHAPTER 3

THE IGNITION SYSTEM

3 : 1 Description
3 : 2 Routine maintenance
3 : 3 Ignition faults
3 : 4 Removing and refitting distributor
3 : 5 Distributor overhaul
3 : 6 Timing the ignition
3 : 7 Sparking plugs
3 : 8 Electronic ignition
3 : 9 Fault diagnosis

3 : 1 Description

A coil type ignition system is used on all engine types, but the distributor type differs. On the 1300 and 1600 pushrod OHV engines a conventional contact breaker is used, but on the OHC engines and also the 1800 version a dual contact breaker is used. On the 2000 engine an electronic breakerless distributor is used and this is described separately in **Section 3 : 8**. To ensure optimum ignition timing at all engine speeds the distributors are fitted with centrifugal weights in the normal manner, but no vacuum advance/retard is provided. The two contact breaker types, which may be of Marelli or Ducellier manufacture, are described first in this chapter.

The ignition coil is wound as an auto-transformer, with the primary and secondary windings connected in series, the common junction being connected to the contact breaker with the positive feed from the battery going to the opposite terminal of the LT winding, via the ignition switch.

When the contacts are closed, current flows in the coil primary winding, magnetising the core and setting up a fairly strong magnetic field. Each time the contacts open, the battery current is cut off and the magnetic field collapses, inducing a high current in the primary winding and a high voltage in the secondary. The primary current is used to charge the capacitor connected across the contacts and the flow is high and virtually instantaneous. It is this high current peak which induces the surge in the secondary winding to produce the sparking voltage across the plug points. Without the capacitor, the current peak would be much smaller and the sparking voltage considerably reduced, in fact to a point where it would be insufficient to fire the mixture in the cylinders. The capacitor, therefore, serves the dual purpose of minimising contact breaker wear and providing the necessary high charging surge to ensure a powerful spark.

3 : 2 Routine maintenance

Every 10,000km (6000 miles) or 6 months, lubricate the distributor and check the contact points. Also clean the sparking plugs and check the ignition timing.

The attachment of the distributor to the engine and the cap to the distributor is shown in **FIG 3 : 1** for pushrod engine models, or **FIG 3 : 2** for OHC models. Typical upper distributor components are shown in **FIGS 3 : 3** and **3 : 4** respectively.

Always keep the distributor cap, HT leads, and the top of the ignition coil clean and free from dirt or moisture. Wipe the parts with a soft clean cloth, not forgetting to wipe the inside of the distributor cap occasionally as well.

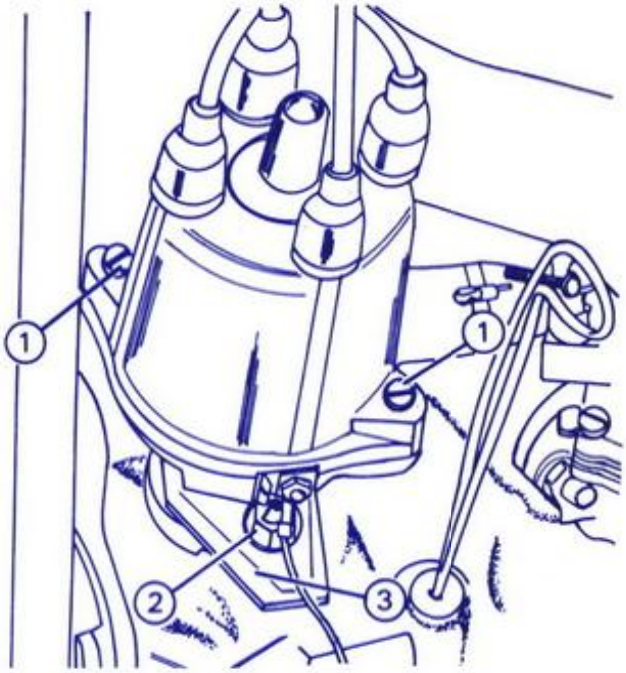

FIG 3 : 1 Marelli distributor, pushrod OHV models

Key to Fig 3 : 1 1 Cap attachment screws 2 Securing nut 3 Clamp

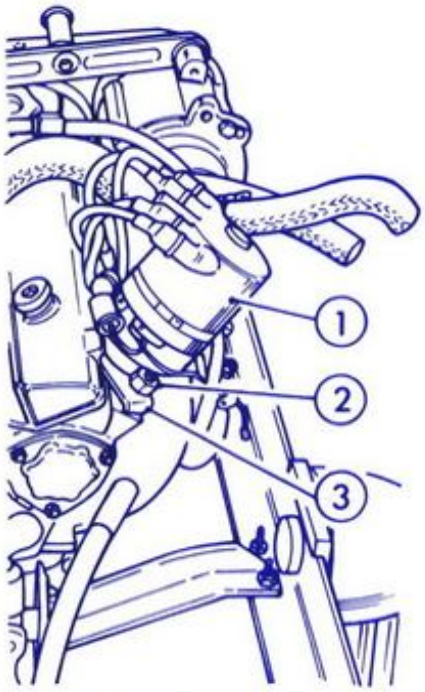

FIG 3 : 2 Distributor installation, OHC models

Key to Fig 3 : 2 1 Distributor cap 2 Securing nut 3 Clamp

Lubrication :

Take out the screws which secure the distributor cap and lift off the cap. Remove the rotor from the top of the distributor shaft and wipe clean the cam which opens the contact breaker points. Apply a very thin smear of grease to the cam, a drop of oil to the contact pivot and a few drops to the shaft and weights, then refit the rotor. Avoid allowing grease or oil to contaminate the contact breaker points, lubricating sparingly for this reason.

Adjusting the contact points :

1300 and 1600 pushrod engines :

Turn the engine until one of the cams has opened the points to the fullest extent, then check the gap between the points with a clean feeler gauge. The correct gap is 0.37 to 0.43mm (0.015 to 0.017in). To adjust the gap, slacken the screw **B** in **FIG 3 : 3** so that the points can be altered but do not move on their own. Insert a screwdriver into the slot **D** and by rotating the screwdriver the points gap can be altered. Slide a feeler gauge of the correct thickness between the unworn portions of the contacts **A** and adjust them until the feeler gauge is just lightly nipped and a slight drag is felt on it as it is moved. Tighten the screw **B** and check that the adjustment has not altered.

OHC engines :

The distributor used on OHC models is fitted with two sets of contact points, one for starting and one for normal running (see **FIG 3 : 4**). Adjust each set of points in turn.

Turn the engine until one of the cams has opened the set of points being measured to their fullest extent, then check the gap between the points with clean feeler gauges. The correct gap is 0.012 to 0.019in for starting points 1, or 0.014 to 0.017in for running points 3 (see **FIG 3 : 4**). To adjust the gap, slacken the securing screw for the appropriate set of points, then move the fixed contact point until the gap is correct. Tighten the screw and recheck the gap.

Note that two capacitors, one for each points set, are fitted, as shown at 2.

Cleaning the contact points :

Use a fine carborundum stone or a special contact point file to polish the points if they are dirty or pitted, taking care to keep their faces flat and square. On completion, wipe away all dust with a cloth moistened in petrol, then set the points gap as described previously. If the points are badly pitted or burned and would require excessive removal of material to clean up, a new contact point set should be obtained and fitted.

3 : 3 Ignition faults

If the engine runs unevenly, set it to idle at about 1000r/min and, taking care not to touch any metal part of the plug leads, remove and replace each lead from its sparking plug in turn. Doing this to a plug which is firing properly will accentuate the uneven running but will make no difference if that plug is not firing. To avoid shocks during this test, it is advisable to wear a thick glove or use a pair of insulated pliers to pull off the leads.

Having located the faulty cylinder, stop the engine and remove the plug lead. Remove the plug connector from the lead so that the end of the lead is exposed. If the plug connector cannot be removed, insert a drill or suitable metal bar into the connector to act as an extension. Start the engine and hold the lead carefully to avoid shocks so that the end is about $\frac{1}{8}$in away from the cylinder head. A strong, regular spark confirms that the fault lies with the

sparking plug, which should be cleaned as described in **Section 3:7** or renewed if defective.

If the spark is weak and irregular, check the condition of the lead and, if it is perished or cracked, renew it and repeat the test. If no improvement results, check that the inside of the distributor cap is clean and dry and that there is no sign of tracking, which can be seen as a thin black line between the electrodes or to some metal part in contact with the cap. Tracking can only be rectified by fitting a new cap. Check that the carbon brush in the centre of the cap is clean and that it moves freely against its spring to make good contact with the rotor arm. Check the brass segments in the cap for wear or burning. Renew the cap if any fault is found.

If these checks do not cure a weak HT spark, or if no spark can be obtained at the plug or lead, check the LT circuit as described next.

Testing the LT circuit:

The LT circuit connects the battery, ignition switch, coil primary winding and the contact breaker assembly and provides timed pulses of current to the coil primary windings as the contacts open and close. These pulses control the secondary coil winding which provides current at high voltage to the distributor, where the distributor rotor arm directs it through the HT leads to the sparking plugs.

Remove the distributor cap and position it out of the way, without disconnecting any of its leads. Check that the contact breaker points are clean and correctly set. Disconnect the thin wire from the coil that connects to the distributor. Connect a 12 volt test lamp between these terminals to complete the circuit, switch on the ignition and turn the engine slowly. If the lamp lights and goes out as the points close and open, the circuit is in order. If the lamp fails to light, there is a fault in the LT circuit. Remove the lamp and reconnect the wire to the coil and distributor.

If the fault lies in the LT circuit, use the lamp to carry out the following tests with the ignition switched on. Remove the wire from the ignition switch side of the coil and connect the lamp between the end of this wire and earth. If the lamp fails to light, it indicates a fault in the wiring between the battery and the coil, or in the ignition switch. Reconnect the wire if the lamp lights.

Disconnect the wire from the coil that connects to the distributor. Connect the lamp between the coil terminal and earth. If the lamp fails to light it indicates a fault in the coil primary winding and a new coil must be fitted. Reconnect the wire if the lamp lights and disconnect its other end from the distributor. If the lamp does not light when connected between the end of this wire and earth it indicates a fault in that section of wire.

Capacitor:

The best method of testing a capacitor (condenser) is by substitution. Disconnect the original capacitor and connect a new one between the LT terminal on the distributor and earth for test purposes. If a new capacitor is proved to be required, it can then be properly fitted.

An alternative check for the capacitor is to charge it from a DC source, such as the car battery, then leave it for about 5 min. The terminal and case of the capacitor should then be shorted with a piece of wire and, if the capacitor is in good condition, a noticeable spark should result.

If a new capacitor is required, the capacity of the replacement unit should be 0.20 to 0.25 microfarad at 50 to 1000Hz.

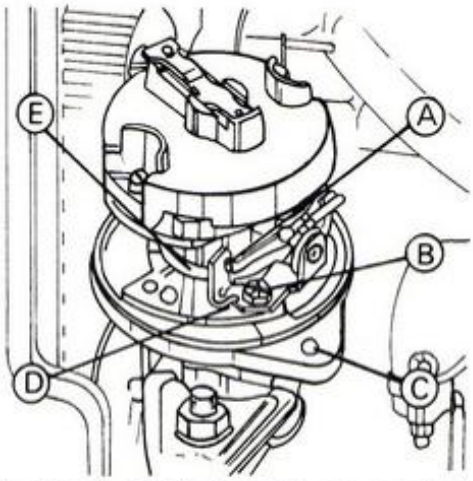

FIG 3:3 Marelli distributor with cap removed, single contact breaker type

Key to Fig 3:3 **A** Contact points **B** Screw **C** Housing **D** Slot **E** Capacitor lead

3:4 Removing and refitting distributor

To remove the distributor from the engine, first disconnect the HT leads to the sparking plugs and unscrew and remove the distributor cap. Disconnect the LT lead from the connector at the side of the distributor. Remove the nut and distributor securing clamp, then lift the distributor clear of the engine.

Time may be saved in setting up after maintenance if the precise position of the rotor in relation to the distributor

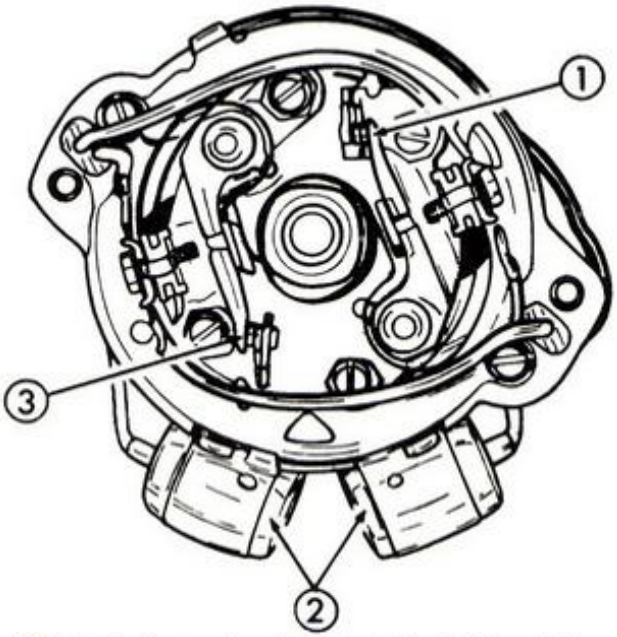

FIG 3:4 Contact breaker assemblies, OHC models

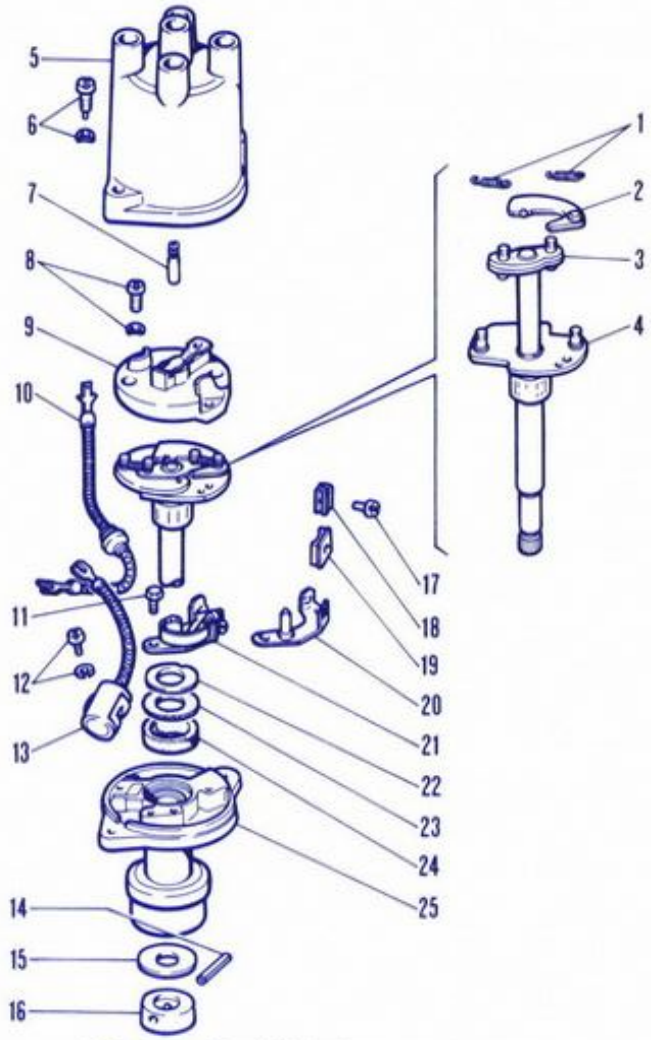

FIG 3 : 5 Marelli distributor components

Key to Fig 3 : 5 1 Centrifugal springs 2 Centrifugal weight 3 Distributor shaft 4 Cam and carrier plate 5 Distributor cap 6 Screw and washer 7 Carbon brush 8 Screw and washer 9 Rotor 10 LT lead 11 Screw 12 Screw and washer 13 Capacitor 14 Securing pin 15 Plate 16 Oil thrower 17 Screw 18 Bridge piece 19 Insulator 20 Fixed contact point 21 Complete contact point set 22 Washer 23 Fibre washer 24 Felt pad 25 Distributor body

body is marked and the engine crankshaft is not turned while distributor maintenance is being carried out.

Cover the distributor mounting hole with a clean rag to prevent the entry of dirt while the distributor is being serviced.

Refitting:

If the crankshaft position has not been altered since the distributor was removed, turn the rotor to the approximate position it was in and insert the spindle into the gear at the bottom of the distributor shaft housing. Correctly set the ignition timing as described in **Section 3 : 6**.

Should the crankshaft position have been altered, it is necessary to first set piston No 1 at the top of its compression stroke. To do this, remove the cylinder head cover and examine the position of the rocker arms on pushrod models, or the cams on OHC models. Turn the engine until both valves for No 1 (front) cylinder are fully closed, this being when the springs are fully extended. Alternatively, remove the sparking plug from No 1 cylinder and turn the engine until compression can be felt by a thumb placed over the plug hole. The engine should now be turned a little more as necessary until the timing marks are correctly aligned as described in **Section 3 : 6**. Turn the rotor of the distributor until the rotor arm is pointing towards terminal 1 on the distributor cap. Insert the distributor shaft home in the drive gear and set the ignition timing as described in **Section 3 : 6**. Refit the cylinder head cover(s) if removed.

On completion, refit the distributor cap and connect the HT leads to the respective sparking plugs. Finally, reconnect the LT wiring to the distributor.

3 : 5 Distributor overhaul

Marelli :

Typical distributor components are shown in **FIG 3 : 5**. Remove the two fixing screws and remove the distributor cap. Dismantle the centrifugal weights and springs. Remove pin 14 and slide oil thrower and plate from the base of the distributor. The shaft may now be withdrawn from the distributor body. Disconnect and remove the capacitor and dismantle the contact breaker assembly. Wash all metal parts in a suitable cleaning fluid and dry them.

Examine the shaft and rotor for signs of excessive play or wear, renewing parts as necessary. Examine the fixed and moving contacts of the contact breaker assembly, cleaning the contact faces as described in **Section 3 : 2** if necessary.

Check the cam faces for signs of wear or scoring. Polish out light scores with a smooth carborundum stone or renew the parts if they are too badly worn.

Examine the insulation of the rotor cap and distributor cap for signs of tracking or carbonisation and renew any faulty part. Check the condition of the rotor contact arm, distributor cap internal carbon brush and HT contacts in the distributor cap. Renew the cap if any defects are found.

Check the condition of the cam follower on the moving contact arm of the contact breaker assembly and renew if the wear is such as to alter the dwell angle by more than 2°. This is difficult to check without a special meter but if follower wear is such that the setting of the contact gap necessitates the fixed plate being close to the limit of adjustment, ignition timing will almost certainly be affected and a new contact point set should be fitted.

Examine the condition of weights and springs. The springs must not be stretched, which would mean that the coils do not close tightly when the springs are at rest, and the weights must be an easy, but not loose, fit on the pins. Renew parts as necessary.

Reassemble the distributor and set the contact points gap as described in **Section 3 : 2**. If a small spring balance is available with a scale of up to 2lb, check the pull of the moving arm pressure on the fixed contact. This should be about 20oz.

Before refitting the rotor, check that the movement of the centrifugal weights about their pins provides the necessary movement to the cam on the distributor shaft and that the action is free. Apply a spot of oil to the pivot points and to the shaft before inserting in the mounting bush. Insert the shaft into the bush and refit the plate

and oil thrower, securing with the pin. Check for end play which should not be noticeable. Fit and reconnect the capacitor across the contact breaker points.

Examine the HT leads and renew any found to be cracked or perished.

Ducellier :

A Ducellier distributor with fully centrifugal advance operation as shown in **FIG 3 : 6** may be fitted as an alternative to the Marelli type on certain models. The contact points gap, dwell angle and ignition timing are all the same as for the Marelli distributor. The felt pad in the top of the spindle should be lubricated with oil at servicing intervals.

To adjust the contact points, refer to **FIG 3 : 6** and the instructions given for adjustment of the Marelli type. When changing the contact points care must be taken when removing and refitting the clip and insulator washer 18 and also when slackening and tightening the LT terminal 12.

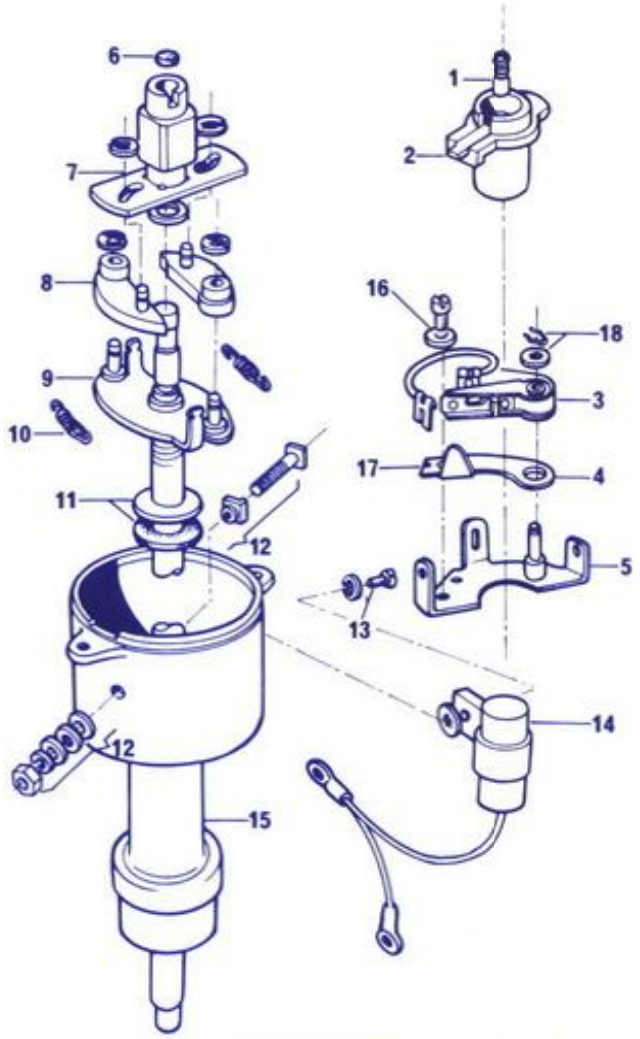

FIG 3 : 6 Ducellier distributor components

Key to Fig 3 : 6 1 Carbon brush 2 Rotor 3 Moving contact point 4 Fixed contact point 5 Base plate 6 Felt pad 7 Cam plate 8 Centrifugal weights 9 Shaft and carrier plate 10 Centrifugal spring 11 Washers 12 LT terminal and insulators 13 Screw and washer 14 Capacitor 15 Distributor body 16 Screw and washer 17 Adjustment slot 18 Clip and insulator washer

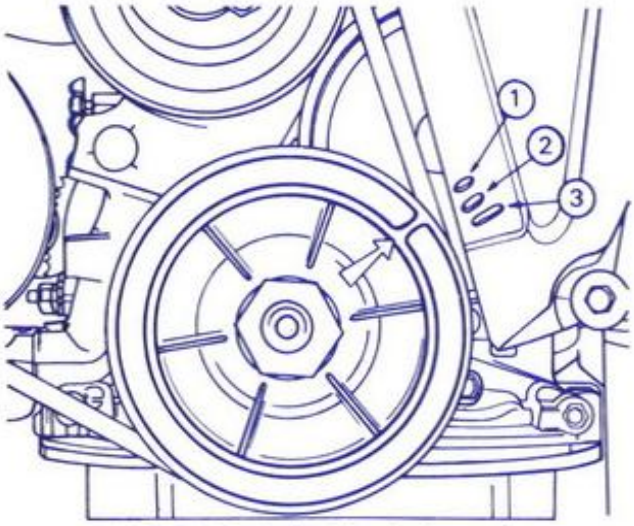

FIG 3 : 7 Typical ignition timing marks

Key to Fig 3 : 7 1 10° BTDC 2 5° BTDC 3 TDC
Timing mark on pulley is arrowed

To remove and refit the distributor refer to **Section 3 : 4**, and for an overhaul refer to **FIG 3 : 6**. The distributor cap, rotor 2, contact points 3/4 and base plate 5 must be detached first before the shaft can be withdrawn after removing the retaining pin.

3 : 6 Timing the ignition

Static timing, all models :

The piston for No 1 (front) cylinder must be a little before TDC on the compression stroke in order to set the ignition timing. This should be carried out as described in the distributor refitting instructions (see **Section 3 : 4**). Now turn the engine a little more as necessary until the timing marks align at 10° BTDC as shown in **FIG 3 : 7**.

Loosen the distributor clamp nut shown in **FIG 3 : 1** or **3 : 2**. Connect a 12 volt test lamp between the LT terminal on the side of the distributor and earth. Turn the distributor if necessary to ensure that the contact points are fully closed. Now switch on the ignition and turn the distributor slowly until the test lamp just lights, which indicates that the points are just opening. Without moving the distributor from this position, tighten the clamp securely.

Stroboscopic timing :

This method should be used to set the ignition timing accurately if the appropriate equipment is to hand or the work can be carried out at a service station. Set the ignition by the test lamp method first. Connect the timing light to the ignition circuit of No 1 cylinder, in accordance with the manufacturer's instructions. Run the engine at normal idling speed and direct the timing light on to the timing pointer. It is important that normal slow idle speed is not exceeded, otherwise the centrifugal weights will operate and give a false reading. Turn the distributor until the timing marks appear aligned, then tighten the distributor clamp securely.

3:7 Sparking plugs

Inspect and clean sparking plugs regularly. When removing sparking plugs, ensure that their recesses are clean and dry so that nothing can fall into the cylinders. Have sparking plugs cleaned on an abrasive-blasting machine and tested under pressure with the electrode gaps correctly set at 0.6 to 0.7mm (0.024 to 0.023in). The electrodes should be filed until they are bright and parallel. The gaps must always be set by adjusting the earth electrode. Never attempt to bend the centre electrode. As a general rule, plugs should be cleaned and tested at about 6000 mile intervals and renewed at about 12,000 mile intervals or before if badly worn.

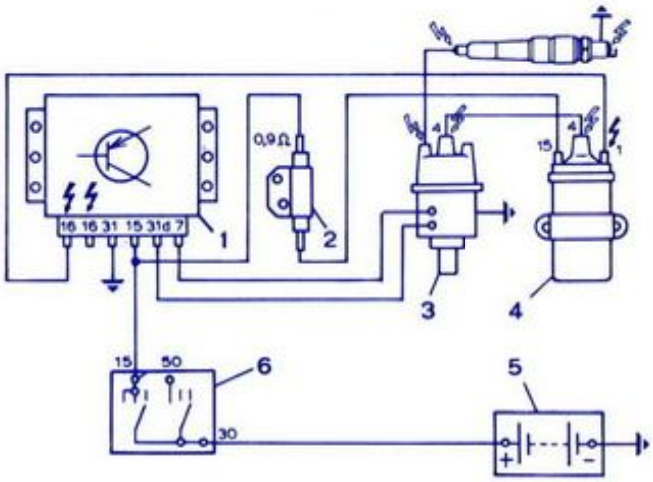

FIG 3:8 Wiring diagram for the Bosch electronic ignition system

Key to Fig 3:8 1 Electronic control unit 2 Capacitor 3 Distributor 4 Ignition coil 5 Battery 6 Ignition switch

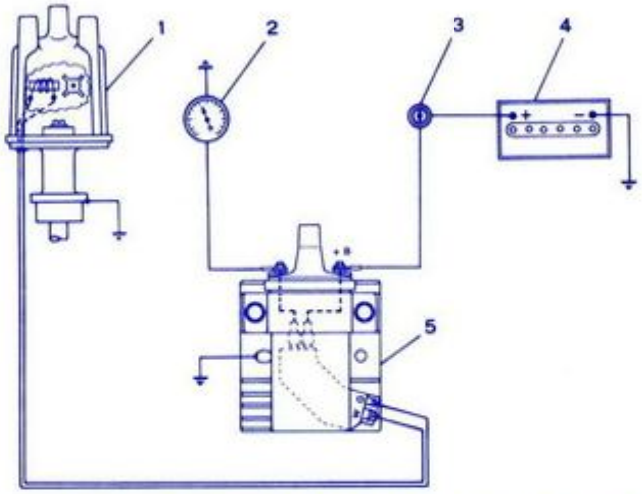

FIG 3:9 Wiring diagram for the Marelli electronic ignition system

Key to Fig 3:9 1 Distributor and pulse generator 2 Tachometer 3 Ignition switch 4 Battery 5 Electronic module and coil assembly

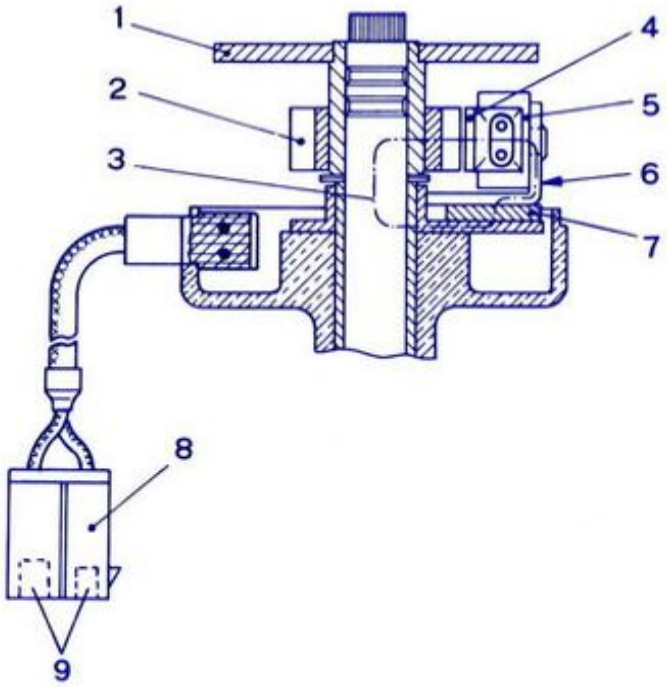

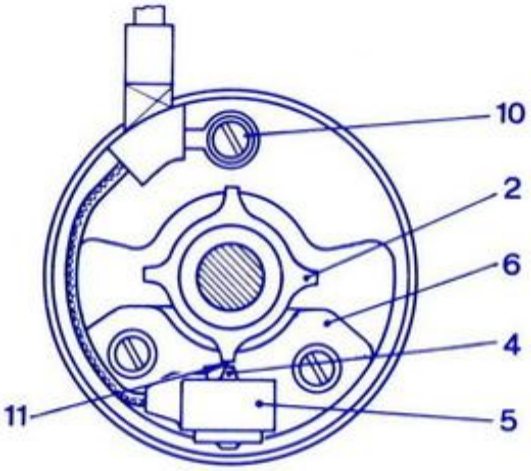

FIG 3:10 Cross-sectional diagrams of the electronic distributor

Key to Fig 3:10 1 Timing plate 2 Reluctor 3 Magnetic field 4 Stator pole 5 Coil 6 Fixed plate 7 Permanent magnet 8 Connector to electronic module 9 Terminals 10 Retaining screw for earth lead 11 Air gap

3:8 Electronic ignition

The advantages claimed for the electronic breakerless distributor ignition system are that it eliminates wear and, therefore, adjustment of certain moving parts, thus reducing maintenance time and costs and also retaining engine performance for long periods. It is also claimed to reduce running costs by permitting a weaker fuel/air mixture to be used.

Two systems are used on the 2000 OHC engines, one by Bosch and the other by Marelli, and the wiring diagrams for these are shown in **FIGS 3:8** and **3:9** respectively.

The distributor, which outwardly resembles the conventional type, uses a pulse generator instead of a contact

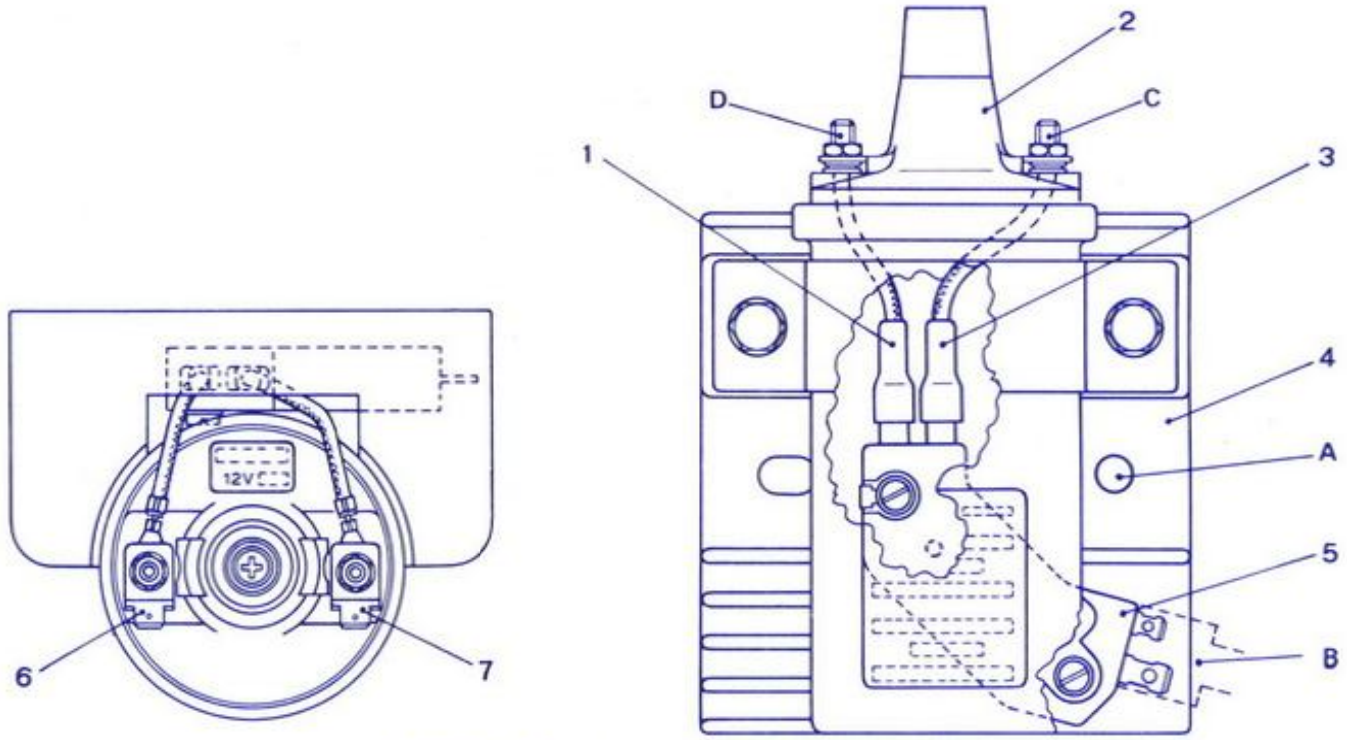

FIG 3 : 11 The coil and electronic module assembly

Key to Fig 3 : 11 1 Connector 2 Ignition coil 3 Connector 4 Heat dissipator 5 Electronic module 6 Tachometer terminal 7 Ignition coil terminal **A** Dissipator earth point **B** Connector **C** Coil '+B' terminal **D** Primary winding output terminal

breaker to generate the HT current in the coil. Sectional diagrams of a typical distributor are given in **FIG 3 : 10** and the principle of operation is as follows: the timing plate 1 and four pole reluctor 2 rotate with the distributor shaft, while the coil 5 connected to a permanent magnet 7, fixed plate 6 and stator pole 4 are fixed to the body of the distributor giving an air gap 11 of 3 to 4mm (0.011 to 0.015in) betweeen the reluctor poles and the stator pole. Each time a reluctor pole passes the stator pole, a magnetic pulse is generated which is processed by the transistorised electronic module and interrupts the coil primary winding circuit and so generates the HT current in the secondary coil winding. As mentioned earlier, the automatic advance mechanism is traditional and so is the operation of the HT section of the distributor. Full radio/TV suppression is included.

When working on this type of installation there are a number of precautions to be observed in order to avoid damage to the components or injury to the person. Never check the system voltage or current using the 'sparking' method. Never remove the HT lead from the coil when the engine is running or being started. Do not earth the LT coil lead to the tachometer (terminal connected to black wire). Do not start the engine with instrument panel disconnected. Do not switch on the ignition if the heat dissipator (see **FIG 3 : 11**) is not fully earthed. Do not short the LT circuit from the coil to tachometer.

Checking the system :

First make sure that all the wiring is in good condition and that the connections are clean and tight. Switch the ignition on and check that the resistance at the earth connections to the heat dissipator, engine and battery is less than 0.2ohm. Check that the connector **B** in **FIG 3 : 11** is securely locked against the stop.

Still with the ignition on and the engine stopped, check that the voltage at coil terminal +B is 12 volts and that the voltage variation at the coil terminal +D is not more than 0.3 volt. If these values are not obtained, check the primary windings for open circuits and the resistance across the two coil LT terminals, which should be 0.8ohm approximately. Be careful not to short the coil LT lead to the tachometer to earth.

Check each plug lead in turn by disconnecting it from the plug and hold the bare wire end about 5mm (0.2in) from a clean earth on the engine block. Start the engine and look for a strong spark. If no spark occurs or a spark is weak, check the HT lead and the distributor. Do not disconnect the coil HT lead during this test.

Switch the ignition off and disconnect the terminal 8 in **FIG 3 : 10**. Measure the resistance across the two terminals 9 which should be between 700 and 800ohms. Remove the distributor cap, check that the screw 10 is tight and measure the rotor arm resistance which should be approximately 5000ohms. The air gap at 11 should be 0.3 to 0.4mm (0.011 to 0.015in). If these checks are satisfactory, any fault remaining will be in the electronic module which must be renewed as no servicing is provided for.

Timing the ignition :

This is carried out as described earlier and the initial static advance is 10° BTDC. When using a stroboscopic

timing lamp, connect this to No 1 sparking plug and the two battery terminals, **not** to the coil terminals otherwise the lamp may be damaged.

3 : 9 Fault diagnosis

(a) Engine will not fire

1 Battery discharged
2 Contact points dirty, pitted or wrongly adjusted
3 Distributor cap dirty, cracked or tracking
4 Contact inside distributor cap not touching rotor
5 Faulty cable or loose connection in LT circuit
6 Distributor rotor arm cracked or dirty
7 Faulty coil
8 Broken contact breaker spring
9 Contact points stuck open

(b) Engine misfires

1 Check 2, 3, 4 and 7 in (a)
2 Weak contact breaker spring
3 HT plug or coil lead defective
4 Sparking plugs loose
5 Sparking plug insulation cracked
6 Sparking plug gaps incorrectly set
7 Ignition timing incorrect
8 Faulty capacitor

(c) Poor acceleration

1 Ignition retarded
2 Centrifugal weights seized
3 Centrifugal springs weak, broken or disconnected
4 Distributor clamp loose
5 Incorrect contact points gap
6 Worn plugs

CHAPTER 4
THE COOLING SYSTEM

4:1 Description
4:2 Routine maintenance
4:3 The radiator
4:4 The electric cooling fan
4:5 The water pump
4:6 Drive belt tensioning
4:7 The thermostat
4:8 Frost precautions
4:9 Fault diagnosis

4:1 Description

The cooling system is of the pressurised sealed type. Coolant circulation is assisted by a water pump driven by a belt, a thermostat preventing full circulation until normal engine operating temperature is reached, thus ensuring a rapid warm up and good heater operation.

Standard 1300 OHV models have a cooling fan fitted to the water pump shaft, this being belt driven from the crankshaft pulley. Special 1300 and all 1600, 1800 and 2000 models are fitted with an electric fan unit controlled by a temperature switch mounted in the radiator. From May 1978 all models are fitted with electric fans.

An expansion tank containing a quantity of coolant is connected to the radiator by means of a hose. At high operating temperatures, when the coolant in the sealed system expands, excess coolant passes through a valve into the expansion tank. When the system cools, the valve allows coolant from the expansion tank to flow back into the radiator. With this system, no coolant loss should occur during normal operation.

4:2 Routine maintenance

Apart from an occasional check on the condition of the hoses and hose clips and a visual check on coolant level in the expansion tank, very little maintenance should be necessary. There should also be no need for regular topping up of the coolant. If regular topping up is required, the system should be examined for leaks before adding coolant.

Check the level of coolant in the expansion tank and top up as required. The level should be about 2½in (6cm) above the MIN mark on the tank, when the engine is cold. The level will be higher when the engine is hot. If antifreeze is being used, top up with antifreeze mixture to prevent dilution of the coolant. It is recommended that an antifreeze solution is maintained in the cooling system all year round, as antifreeze also raises the boiling point of the coolant providing extra protection against overheating in summer, and the anti-corrosive properties of the antifreeze will protect the cooling system in general.

Every two years the system should be drained, flushed and refilled with a new coolant solution in the manner described later. Note that if plain water is to be used in the system it should be mixed with a 5% concentration of Fiat LPR 67 corrosion inhibitor.

Drive belt tension should be checked at regular intervals.

Draining:

Set the heater controls to the full heat position and remove the cap from the expansion tank. Remove the filler cap from the radiator. Open the tap at the bottom of

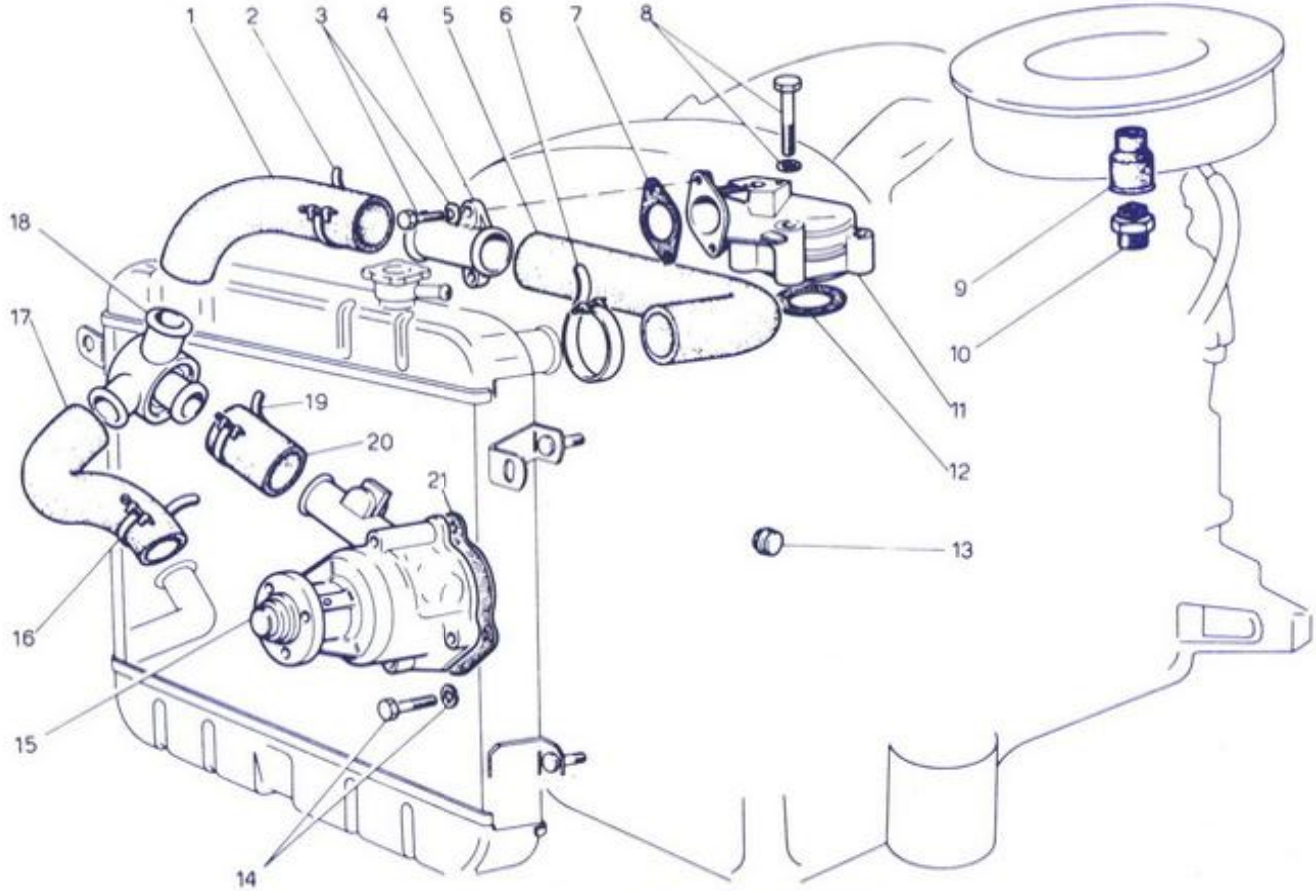

FIG 4:1 Cooling system components

Key to Fig 4:1 1 Cylinder head to thermostat hose 2 Hose clamp 3 Screw and flat washer 4 Connector 5 Connector to radiator hose 6 Hose clamp 7 Outlet gasket 8 Screw and flat washer 9 Sender unit cap 10 Temperature gauge sender unit 11 Cylinder head water outlet 12 Gasket 13 Drain plug 14 Screw and lockwasher 15 Water pump 16 Hose clamp 17 Radiator to thermostat hose 18 Thermostat 19 Hose clamp 20 Thermostat to water pump hose 21 Gasket

the radiator and remove the drain plug from the righthand side of the cylinder block. If a drain tap is not provided on the radiator, release the bottom hose from the radiator connection instead. Allow the coolant to drain, collecting it in a clean container if it is to be re-used. Release the expansion tank mounting strap and hold the tank up so that its contents run into the radiator.

Flushing:

Use a hose to run clean water in through the radiator filler until it runs clean through the drain points. Refit the drain plug and close the radiator tap or refit the hose, then fill the system with water and run the engine long enough to open the thermostat for complete circulation. This will be when the top hose feels warm to the touch. Stop the engine and drain the system again before the sediment has time to settle. Allow the engine to cool, then repeat the flushing operation. Do not add cold water to the cooling system when the engine is warm, otherwise there is the danger of cracking the cylinder block. After repeating the flushing operation, refit the drain plug and close the drain tap or reconnect the hose, then refill the system with coolant solution.

Filling:

Make sure that the heater control is in the full heat position and that both drain points are closed. Slowly fill the system through the filler on the radiator. When the radiator is full, run the engine for a few minutes to disperse any air and top up the radiator again. Fit the radiator cap. Fill the expansion tank to the correct level and run the engine until it has reached its normal operating temperature, which will be when the top hose feels hot to the touch. Leave the engine to cool right down then top up the expansion tank as required.

4:3 The radiator

The radiator, water pump and coolant hoses are shown in **FIG 4:1**.

Removal:

On models fitted with an electric cooling fan, detach the electrical connections from the temperature sender unit at the bottom of the radiator and from the cooling fan motor relay. Remove the fixing nuts and washers and detach the fan and housing from the rear of the radiator, as shown in **FIG 4:2**.

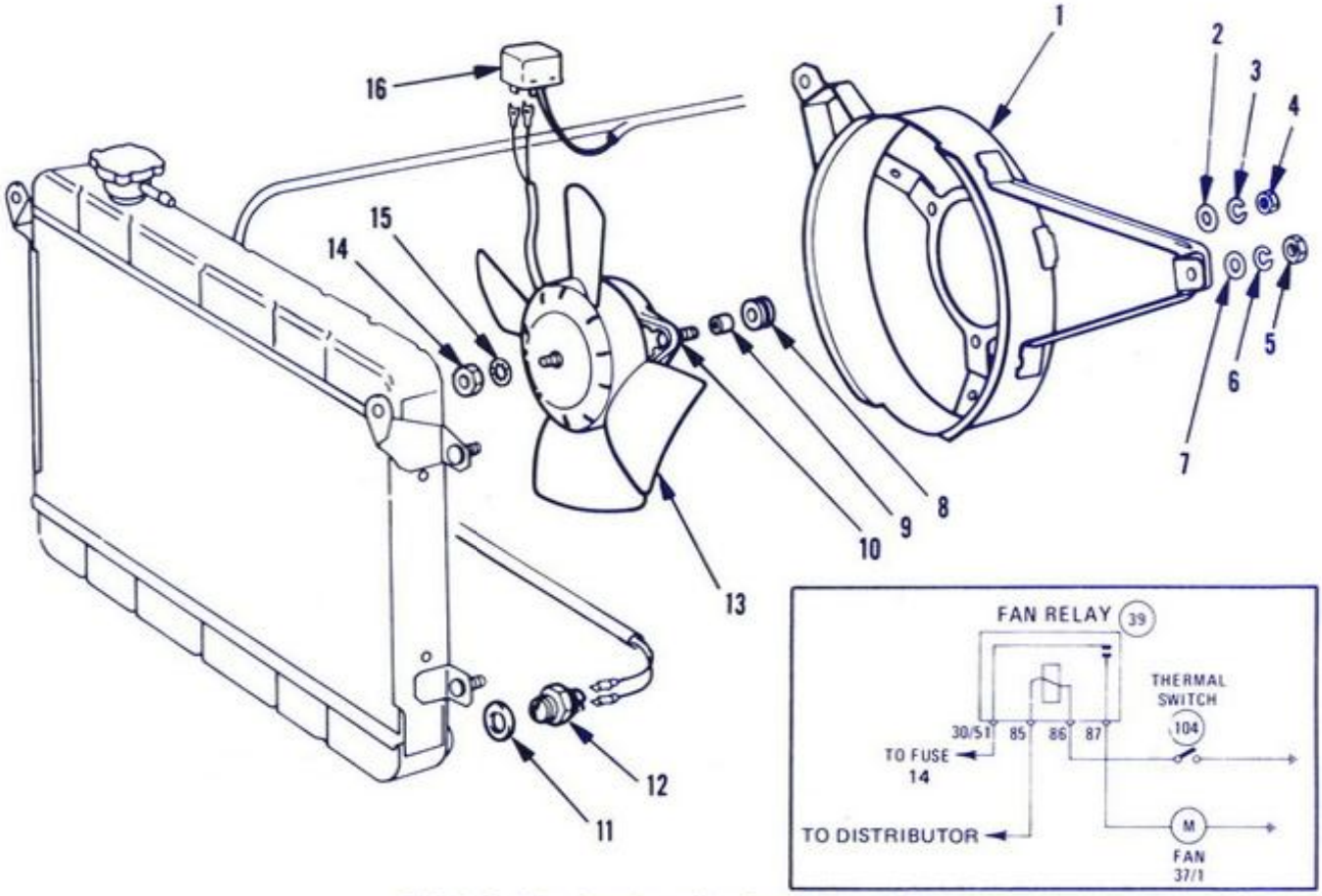

FIG 4:2 The electric cooling fan components

Key to Fig 4:2 1 Fan support 2 Washer 3 Lockwasher 4, 5 Nuts 6 Lockwasher 7 Washer 8 Bush 9 Spacer 10 Stud 11 Gasket 12 Temperature switch 13 Fan 14 Nut 15 Lockwasher 16 Relay
Inset: Electric fan circuit diagram

Drain the system as described in **Section 4:2**. Disconnect the top and bottom hoses from the fittings on the radiator and disconnect the expansion tank hose from the radiator filler neck. On models with automatic transmission, disconnect and plug the fluid pipes at the radiator connections. Take out the fixing screws and carefully lift the radiator from the car.

Refitting:

Carefully refit the radiator to the car and evenly tighten the fixing screws. Reattach the top and bottom hoses and the expansion tank hose. On models so equipped, refit the electric fan assembly to the rear of the radiator then reconnect the electrical terminals to the sender unit and relay. On completion, refill the cooling system as described in **Section 4:2** and, on models with automatic transmission, check and top up the fluid level as described in **Chapter 7**.

4:4 The electric cooling fan

On all but standard 1300 models, an electric cooling fan is fitted to assist the air flow through the radiator when the system reaches a certain temperature. Power for the

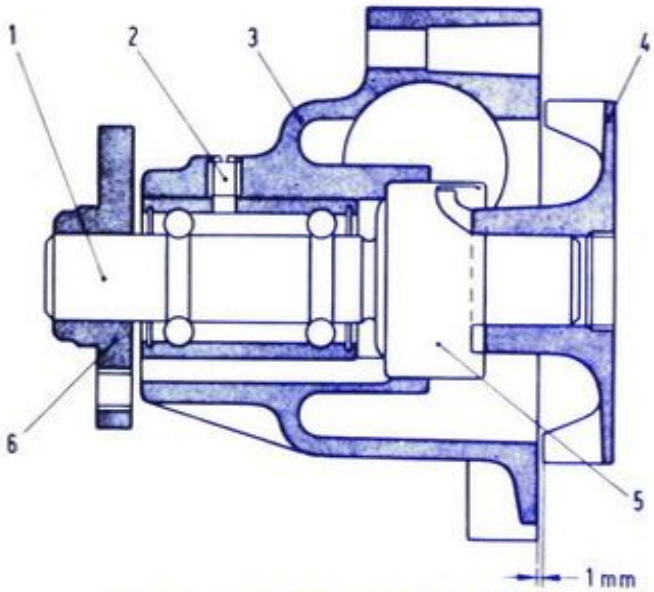

FIG 4:3 Section through water pump

Key to Fig 4:3 1 Drive shaft and bearing 2 Lockscrew 3 Pump housing 4 Impeller 5 Packing 6 Drive shaft hub

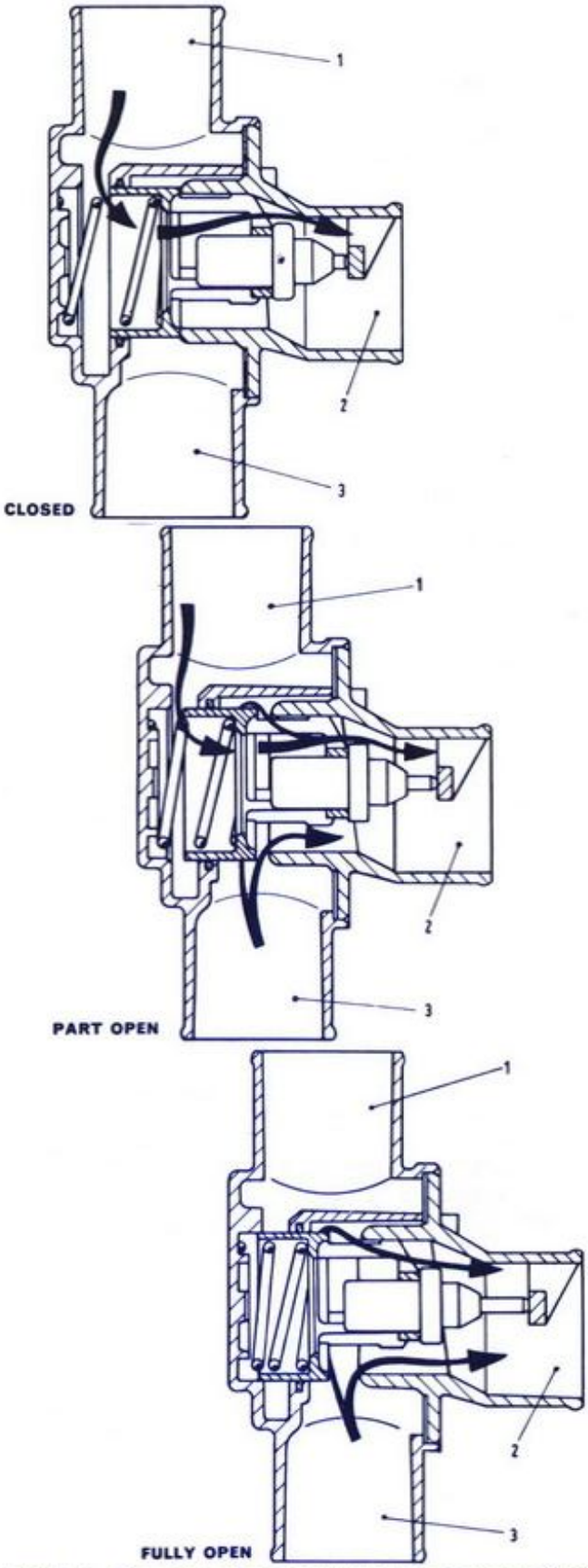

FIG 4:4 Operation of the controlled bypass thermostat

Key to Fig 4:4 1 Intake from block 2 Discharge to pump 3 Intake from radiator

fan is supplied from a relay and it is switched on and off by a temperature sender unit mounted at the bottom of the radiator. Fan removal and refitting is described in **Section 4:3**.

If the fan operates with the engine cold, the temperature sender unit is faulty or there is a shortcircuit in the fan wiring. If the fan does not operate at all, check that the fuse which protects the circuit has not burnt out. To test the motor, connect jumper leads from the battery terminals to the motor terminals. If the motor runs when connected up in this manner, check the wiring between the motor and the temperature sender unit. If the wiring and connections are all in order, the temperature sender unit must be faulty and should be renewed.

4:5 The water pump

Removal:

FIG 4:3 shows a section through the water pump assembly. Drain the cooling system as described in **Section 4:2**. Slacken the drive belt and remove it from the water pump pulley as described in **Section 4:6**. Disconnect the hose from the water pump, then remove the fixing bolts and lift off the pump and gasket. As special press tool equipment is needed to dismantle and reassemble the water pump, the work should be carried out by a service station. The water pump bearing is factory-lubricated and sealed, no additional lubrication being required.

Refitting:

Clean the contact faces of the water pump and cylinder block to remove all traces of old gasket, taking care not to damage the surfaces. Refit the water pump, using a new gasket. Refit and correctly tension the drive belt, then attach the hose to the water pump unit. Refill the cooling system as described in **Section 4:2**.

4:6 Drive belt tensioning

The method of checking and adjusting the water pump and alternator drive belt tension is as follows. Press at the centre of the longest belt run with moderate thumb pressure and if the tension is correct the belt will deflect by approximately ½in. To adjust the belt tension, loosen the alternator mounting bolts and swing the alternator towards or away from the engine as required, then tighten the mounting bolts and recheck the tension.

The belt can be removed by slackening the mountings, moving the alternator as far as possible towards the engine, then releasing the belt from the pulleys. Note that, on models fitted with air conditioning (refrigeration) equipment, the air conditioning pump drive belt must be removed before the fan belt can be removed (see **Chapter 13**).

When air conditioning equipment is fitted, the drive belt should be checked in the same manner as that for the alternator and water pump units. If the belt tension is incorrect, slacken the bolts securing the pump to its mounting bracket then move the pump towards or away from the engine as required before tightening the mounting bolts and rechecking the tension.

Note that correct belt tension is important, as a tight drive belt will cause undue wear on the pulleys and component bearings. A slack belt will cause slip and, possibly, lower output from the driven components.

4:7 The thermostat

A controlled bypass thermostat is fitted to the cooling system and operates as shown in **FIG 4:4**. A faulty thermostat may open at a temperature below the correct figure, preventing the engine from warming up quickly and reducing the heater output. Conversely, if the valve opens at a higher temperature than that specified, engine overheating may result.

Removal:

Drain the cooling system as described in **Section 4:2**. Disconnect the three hoses and lift off the thermostat as shown in **FIG 4:1**.

Testing:

Clean the thermostat and immerse it in a container of cold water together with a 0° to 100°C thermometer. Heat the water, keeping it stirred and check that the valve opens at approximately 85°C. The valve should be fully open at 92°C, at which temperature the thermostat valve stroke should be approximately 0.29in (7.5mm). If the thermostat operates satisfactorily it may be refitted, if not it must be renewed.

Refitting:

Refit the three hoses to the thermostat unit, making sure the connections are tight. Refill the cooling system as described in **Section 4:2**.

4:8 Frost precautions

When antifreeze is to be used the system should first be drained and flushed as described in **Section 4:2**. Ethylene-glycol type antifreeze should be added to the system in the correct proportion as recommended by the manufacturer, to give protection from freezing in the lowest temperatures in which the vehicle is to be operated. After the second winter, drain and flush the system and refill with fresh solution. When adding antifreeze, mix it with a suitable quantity of water before pouring it into the system. Always add the correct antifreeze mixture to the expansion tank when topping up.

Fiat recommend Paraflu 11 antifreeze for their vehicles. When mixed 50% with water it will give protection down to –35°C (–31°F), or –25°C (–13°F) with a 35% concentration.

4:9 Fault diagnosis

(a) Internal coolant leakage

1 Cracked cylinder wall
2 Loose cylinder head bolts
3 Cracked cylinder head
4 Faulty head gasket

(b) Poor circulation

1 Radiator core blocked
2 Engine coolant passages restricted
3 Low coolant level
4 Defective thermostat
5 Perished or collapsed radiator hose
6 Seized or worn water pump
7 Slipping or broken drive belt

(c) Corrosion

1 Impurities in the coolant
2 Too infrequent draining and flushing

(d) Overheating

1 Check (b)
2 Sludge in crankcase
3 Faulty ignition timing
4 Low oil level in sump
5 Tight engine
6 Choked exhaust system
7 Binding brakes
8 Slipping clutch
9 Incorrect valve timing
10 Retarded ignition
11 Mixture too weak
12 Faulty electric cooling fan

NOTES

CHAPTER 5
THE CLUTCH

5:1 Description
5:2 Adjusting the clutch
5:3 Removing the clutch cable
5:4 Removing and dismantling clutch
5:5 Assembling and refitting clutch
5:6 Fault diagnosis

5:1 Description

The clutch is a single dry plate unit of diaphragm spring type. The main components are the driven plate, pressure plate assembly and release bearing.

The driven plate consists of a resilient steel disc attached to a hub which slides on the splined clutch shaft. The friction linings are riveted to both sides of the disc.

The pressure plate assembly consists of the pressure plate, diaphragm spring and housing. The release bearing is a ballbearing of special construction with an elongated outer ring that presses directly against the diaphragm spring when the clutch pedal is operated. The bearing is mounted on a guide sleeve in the gearbox bellhousing.

Clutch operation is by a sheathed cable and lever linkage.

When the clutch is fully engaged, the driven plate is clamped between the pressure plate and the engine flywheel and transmits torque to the gearbox through the splined input shaft. When the clutch pedal is depressed, the pressure plate is withdrawn from the driven plate by cable pressure, the driven plate then ceasing to transmit torque.

5:2 Adjusting the clutch

Correct clutch cable adjustment is essential. Insufficient free play will cause the release bearing to press against the diaphragm when the clutch is engaged, causing clutch slip and excessive bearing and driven plate wear. Excessive free play will prevent proper disengagement of the clutch, resulting in clutch drag and consequent difficult gearchanging.

The cable adjuster is located at the engine compartment bulkhead as shown in **FIG 5:1**.

Free play at the clutch pedal pad should be approximately 1.0in (25mm). To adjust free play, loosen locknut 2 and turn adjuster nut 3 in the appropriate direction, while holding cable hexagon 1 with a second spanner. Tighten the locknut firmly on completion to secure the adjustment.

From May 1978, a self-adjusting type clutch is fitted which has no pedal free play. The total pedal travel is 4.7in (120mm) and the setting is correct when the pedal pad is the same height as the brake pedal pad.

Clutch wear is indicated by lengthening travel and the pedal being raised above the brake pedal. Adjustment, should it be necessary, can be carried out as described for the early type and is shown in **FIG 5:1**.

Lubrication:

The clutch operating mechanism should be lubricated by the application of a good quality grease to the ball pivots shown on the right in **FIG 5:2**.

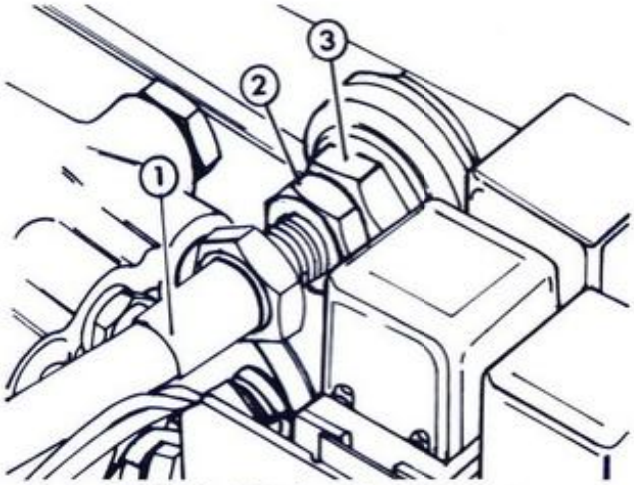

FIG 5:1 Clutch cable adjustment

Key to Fig 5:1 1 Clutch cable outer cover 2 Locknut 3 Adjustment nut

5:3 Removing the clutch cable

FIG 5:3 shows the clutch release mechanism components. Release the cable from the clutch release lever 12 beneath the car, then pull the free end of the cable into the engine compartment. Remove spring clip 24 and release cable connector 1 from the clutch pedal 7. Pull the cable from the engine compartment bulkhead and remove. Examine rubber bush 22 and rubber boot 11 and renew them if they are worn or damaged.

Refit the clutch cable to the car in the reverse order of removal, adjusting pedal free play as described in **Section 5:2** on completion.

5:4 Removing and dismantling clutch

Remove the gearbox as described in **Chapter 6**. Mark the clutch cover and flywheel with a small dab of paint so that on reassembly the clutch will be in the same relative position to retain the original balance of the assembly.

Loosen the bolts holding the clutch assembly to the engine flywheel alternately and evenly to avoid distortion, then lift off the clutch assembly. Remove the driven plate, taking care not to get grease or oil on the friction linings. The release bearing assembly can be removed from the clutch housing on the gearbox. **FIG 5:4** shows clutch pressure and driven plates.

Servicing:

Thoroughly clean all parts in a suitable solvent, with the exception of the driven plate friction linings and the release bearing. The release bearing must not be cleaned with solvents as this would wash the internal lubricant from the bearing, so simply wipe it clean with a cloth.

The clutch cover, spring and pressure plate assembly is an integral unit and must not be dismantled. If any part is defective the assembly must be renewed complete.

Inspect the surface of the flywheel where the driven plate makes contact. Small surface cracks or scratches are unimportant, but if there are any deep scratches the flywheel should be machined smooth or renewed.

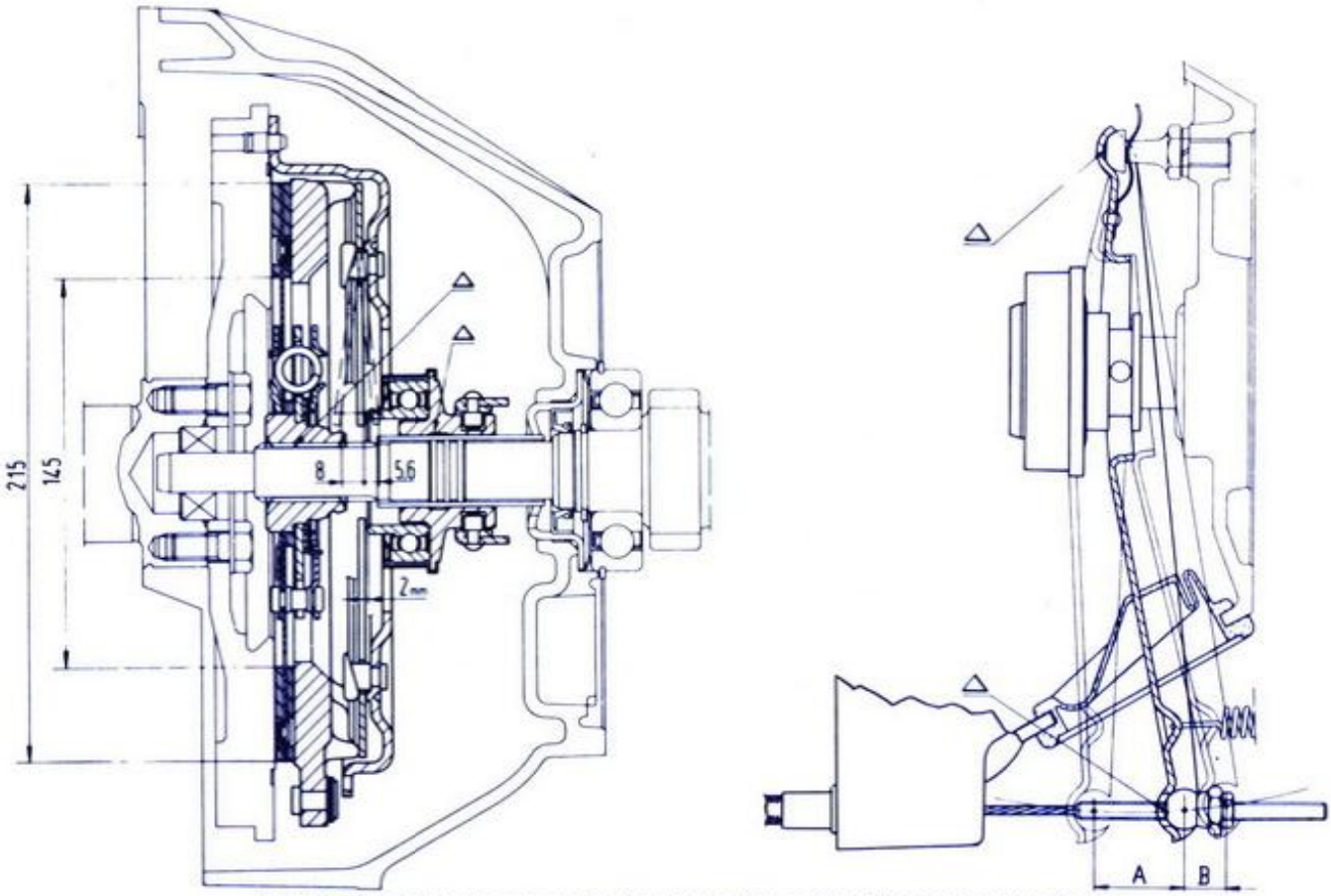

FIG 5:2 Clutch release mechanism lubrication points indicated by triangles

FIG 5:3 Clutch release mechanism components

Key to Fig 5:3 1 Cable connector 2 Nut 3 Rubber pad 4 Nut 5 Stop bolt 6 Bolt 7 Clutch pedal 8 Pedal cover 9 Spring hook 10 Return spring 11 Rubber boot 12 Release lever 13 Lever pivot 14 Lockwasher 15 Pedal return spring 16 Spring hook 17 Pad 18 Nut 19 Lockwasher 20 Support bracket 21 Washer 22 Rubber bush 23 Spacer 24 Clip

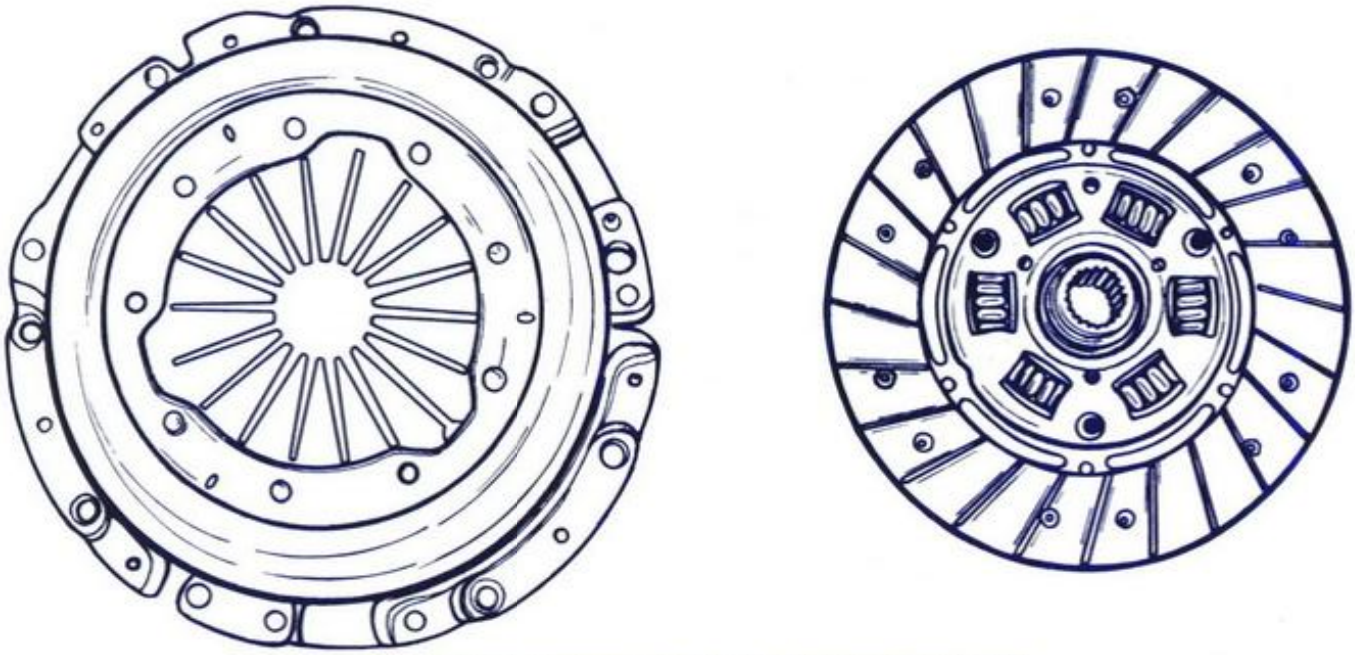

FIG 5:4 Clutch pressure plate (left) and driven plate (right)

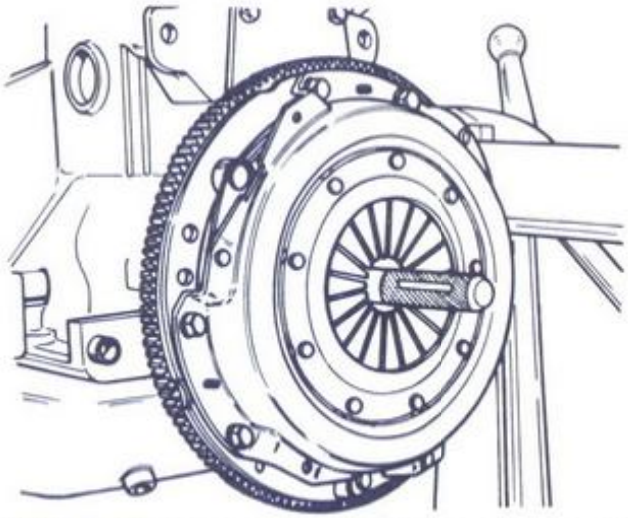

FIG 5:5 Clutch assembly installation, showing the alignment tool through the centre of the clutch

Check the pressure plate for scoring or damage and that the operating surface is flat and true. Check the diaphragm spring for cracks and other damage and the release bearing for roughness when it is pressed and turned by hand. Any worn or damaged part must be renewed.

Check the driven plate for loose rivets and broken or very loose torsional springs. The friction linings should be well proud of the rivets and have a light colour, with a polished glaze through which the grain of the material is clearly visible. A dark, glazed deposit indicates oil on the facings and, as this condition cannot be rectified, a new or relined unit will be required. Any sign of oil in the clutch will call for examination of the crankshaft rear oil seal (see **Chapter 1, FIG 1:11**). Check the disc for runout at the outer circumference, preferably by mounting the plate on a shaft between centres and using a suitable dial gauge assembly. Runout at the outer circumference should not exceed 0.008in (0.2mm). Excessive warping can usually be cured by sliding the disc on to the gearbox splined shaft and twisting the disc as necessary by hand until it is true. If this method does not succeed, however, the disc should be renewed. A warped driven disc will cause clutch judder and wear out very quickly in service.

It is not recommended that owners attempt to reline the clutch driven plate themselves, as the linings must be riveted and trued on the disc and the whole checked under a press. For this reason, the driven plate should be relined at a service station or an exchange unit obtained and fitted. Check the driven plate hub for a smooth, sliding fit on the splined shaft, removing any burrs on the shaft or in the hub with a fine stone.

5:5 Assembling and refitting clutch

This operation is basically the reverse of the removal operation, noting the following points. The use of the special Fiat tool A.70081 or a spare gearbox input shaft is essential for clutch alignment.

Locate the clutch driven disc in position, with the longer splined hub facing away from the flywheel as shown in **FIG 5:2**, then fit the pressure plate assembly in position and insert the special tool or the spare shaft through the whole clutch assembly and into the pilot bearing in the flywheel, as shown in **FIG 5:5**. This aligns the unit so that the gearbox input shaft can be fitted correctly. Turn the clutch unit to index the alignment marks made previously then, with the tool in place, fit and tighten the clutch mounting bolts alternately and eveny to a final torque of 22lb ft (3kgm). Remove the alignment tool, then refit the gearbox as described in **Chapter 6**. On completion, adjust the clutch operating cable as described in **Section 5:2**.

5:6 Fault diagnosis

(a) Drag or spin

1 Oil or grease on driven plate linings
2 Clutch cable binding
3 Distorted driven plate
4 Warped or damaged pressure plate
5 Broken driven plate linings
6 Excessive clutch free play

(b) Fierceness or snatch

1 Check 1, 2, 3 and 4 in (a)
2 Worn driven plate linings

(c) Slip

1 Check 1 in (a) and 2 in (b)
2 Weak diaphragm spring
3 Seized clutch cable
4 Insufficient clutch cable free play

(d) Judder

1 Check 1, 3 and 4 in (a)
2 Contact area of friction linings unevenly worn
3 Bent or worn splined shaft
4 Badly worn splines in driven plate hub
5 Faulty engine or gearbox mountings

(e) Tick or knock

1 Badly worn driven plate hub splines
2 Worn release bearing
3 Bent or worn splined shaft
4 Loose flywheel

CHAPTER 6

MANUAL TRANSMISSION

6 : 1 Description
6 : 2 Routine maintenance
6 : 3 Removing and refitting gearbox
6 : 4 Four-speed gearbox overhaul
6 : 5 Five-speed gearbox overhaul
6 : 6 Gearlever support, 2000 models
6 : 7 Fault diagnosis

6 : 1 Description

Either a four-speed or five-speed gearbox may be fitted according to model type. All forward speeds have synchromesh engagement but reverse gear is engaged by sliding an idler gear into mesh between the gears on the main and countershafts. Synchromesh engagement is not required on reverse as this is only engaged with the car stationary. A sectioned view of the four-speed gearbox is given in **FIG 6 : 1**, and of a five-speed gearbox in **FIG 6 : 2**.

The input shaft is splined to the driven plate of the clutch and revolves with it. The input shaft rotates in a bearing mounted in the casing. Integral with the input shaft is a helical-cut gear. This gear meshes with the front gear on the countershaft gear cluster so that the countershaft is always driven by the input shaft. The remaining gears on the countershaft are in constant mesh with those on the mainshaft so that these too are always revolving when the input shaft is driven. The mainshaft gears are free to rotate about the mainshaft without transmitting drive to it. The mainshaft rotates in bearings in the casing and rear cover and the front end is supported in a needle roller bearing in the input shaft. The gear selector mechanism moves the outer sleeves of the synchromesh units. As the sleeve moves it presses the conical surfaces of the baulk rings so that drive is transmitted, by friction only, between the rotating gear and the mainshaft. All parts are then brought to the same speed and further movement of the synchromesh sleeve allows it to slide over the teeth of the baulk ring and on to those of the gear, making the drive positive. Drive is then transmitted along the mainshaft and propeller shaft to the rear axle. For top gear, the input and mainshafts are connected together to make the drive direct through the gearbox. Reverse gear is engaged by sliding a straight-toothed idler gear into mesh between the gear on the countershaft and the gear on the mainshaft.

Instructions for servicing and overhaul of gearbox components are given in this chapter, but it should be noted that for some overhaul work certain special tools are essential and the owner would be well advised to check on the availability of these factory tools or suitable substitutes before tackling the items involved. Additionally, certain work requires the use of press equipment, so if access to such equipment is not available it is recommended that the work be entrusted to a fully equipped service station.

From May 1978, the original four-speed gearbox is replaced by a four-speed version of the five-speed gearbox. It has the same first to fourth and reverse gear ratios, but the fifth gear is omitted and its synchromesh unit is replaced by a plain spacer. The fifth gear teeth on the layshaft are also omitted. To overhaul the gearbox, refer to **Section 6 : 5 and ignore references to the fifth gear, syncromesh and selector assemblies.**

6 : 2 Routine maintenance

The gearbox oil should be checked at 10,000km (6000 mile) or 6 monthly intervals and changed at 30,000km (18,000 mile) or 18 month intervals.

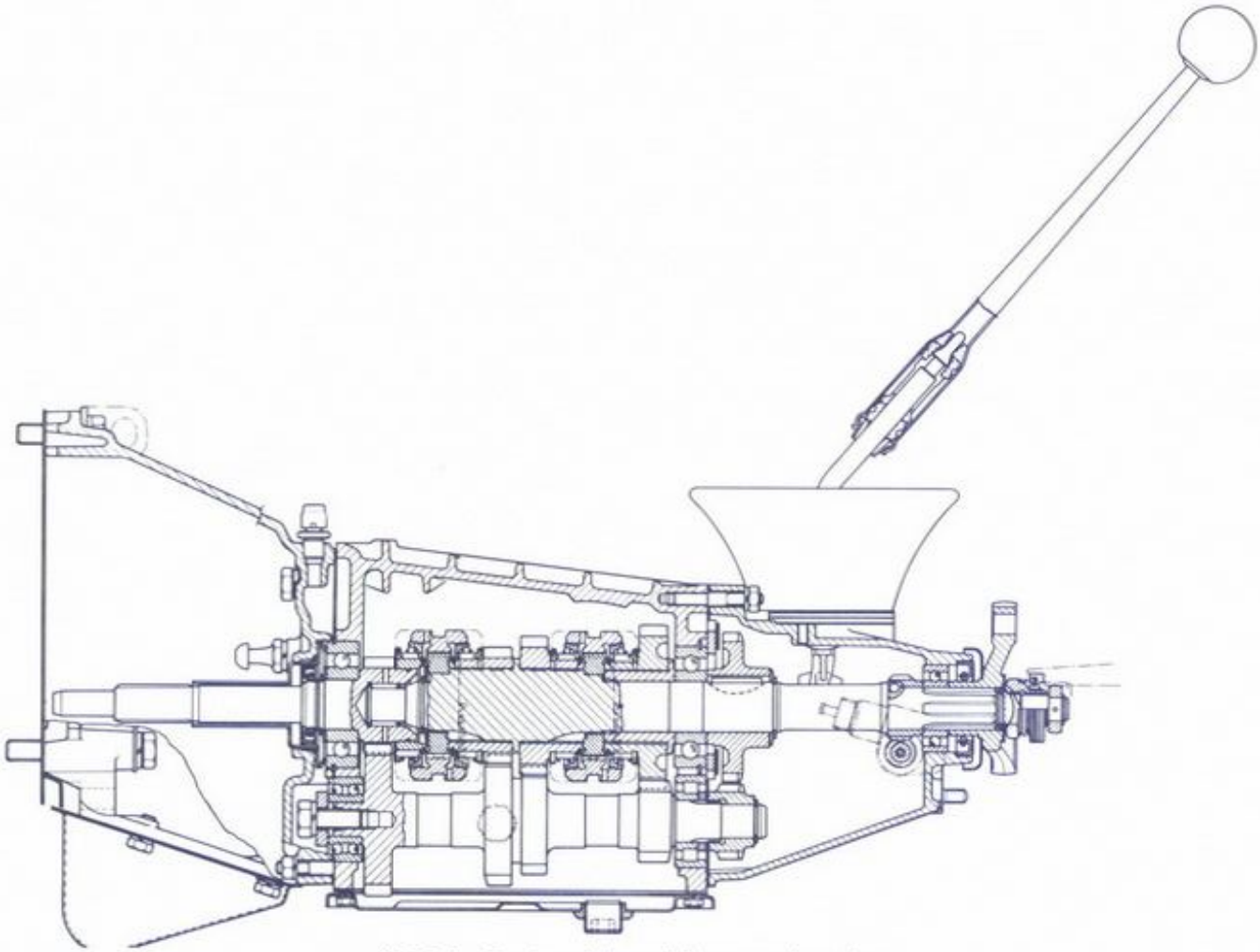

FIG 6:1 Sectioned view of four-speed gearbox

Checking gearbox oil:

Remove the filler plug from the side of the gearbox and check that the oil is up to the lower level of the filler hole. Top up if necessary using SAE 90 oil (not EP type) containing anti-wear additives. Allow any surplus oil to drain away fully before installing the filler plug.

Changing gearbox oil:

Remove the filler plug from the side of the gearbox, then remove the drain plug from beneath the gearbox and allow the oil to drain into a suitable container. Refit and tighten the drain plug, then refill the gearbox through the filler plug hole with new oil of the correct grade. Allow excess oil to drain away fully before refitting the filler plug.

6:3 Removing and refitting gearbox

Removal, 1300 and 1600 OHV models:

Disconnect the battery to prevent accidental short-circuits. Drain the oil if gearbox dismantling is intended.

On four-speed transmission, remove central console and gearlever extension, then remove trim from transmission tunnel and remove metal cover 1 (see **FIG 6:3**) over lower part of gearlever 2.

On five-speed transmission, remove the central console and cover, gearlever extension and gaiter. Use a suitable knife 3 (see **FIG 6:4**) to cut out the insulation panel 2, then lift the panel over lower part of gearlever 1. This done, remove the internal metal cover over the lower part of gearlever.

Raise the car to provide sufficient underbody clearance for gearbox removal and safely support the body on floor stands. Use a suitable jack and adaptor to take the weight of the gearbox assembly.

Refer to **FIG 6:5**. Remove gearbox rear crossmember and mounting 4. Disconnect flexible coupling 9 from propeller shaft and disconnect propeller shaft central support 1, referring to **Chapter 8** for detailed instructions. Disconnect exhaust pipe support bracket 11 from the gearbox. Disconnect the wires from reversing light switch on gearbox.

Disconnect the speedometer cable from speedometer drive 3. Disconnect clutch cable 6 from release lever and spring. Remove flywheel inspection cover 13.

Refer to **Chapter 12** and remove the starter motor. Remove the bolts securing the gearbox to the engine crankcase, preferably using a socket spanner with long extension bar. Making sure that the gearbox is properly supported, carefully move the assembly rearwards,

FIG 6:2 Sectioned view of five-speed gearbox

tilting it as necessary to slide the input shaft out of the clutch assembly. Lower the jack and remove the gearbox from beneath the car. **Do not allow the weight of the gearbox to hang on the splined input shaft while it is in the clutch unit, or severe damage to the clutch driven plate and hub may occur.**

Refitting:

The gearbox is installed in the reverse order of removal. Make sure that all attachments are tightened to the correct torque figures. On completion, adjust clutch free play as described in **Chapter 5** and check gearbox oil level as described in **Section 6 : 2**.

Removal, OHC models:

Disconnect the battery earth cable to avoid accidental shortcircuits. Drain the oil if dismantling is intended. Remove the clamp securing the exhaust pipe to the exhaust manifold. From inside the car, remove the three screws and detach the transmission cover. Refer to

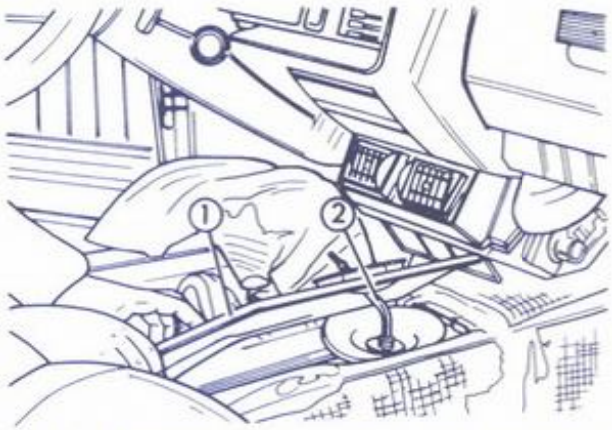

FIG 6:3 Removing tunnel cover 1 over gearlever 2, four-speed transmission

FIG 6:4 Removing insulation panel, 1600 five-speed models

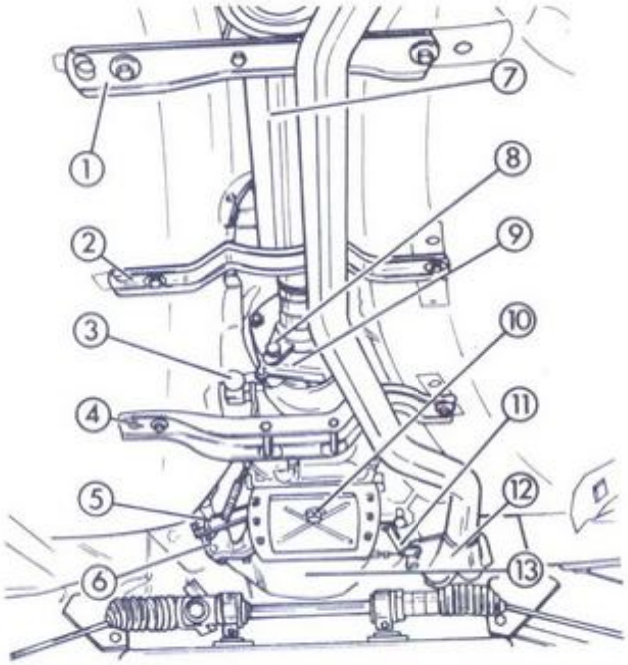

FIG 6:5 Gearbox removal, typical assembly shown

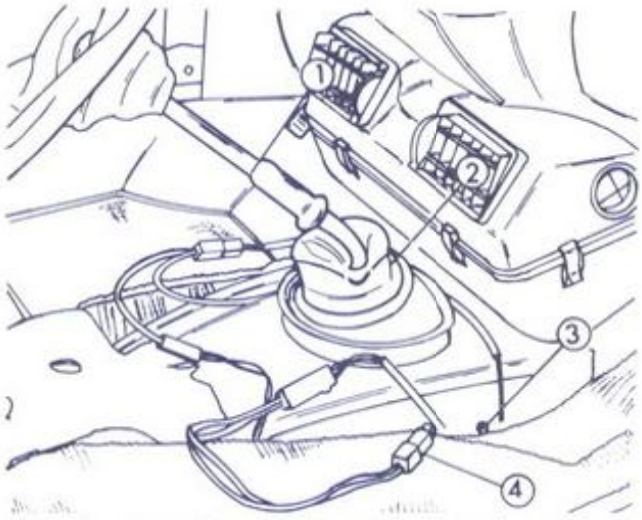

FIG 6:6 Detaching gearlever, boot and connector, 1800 models

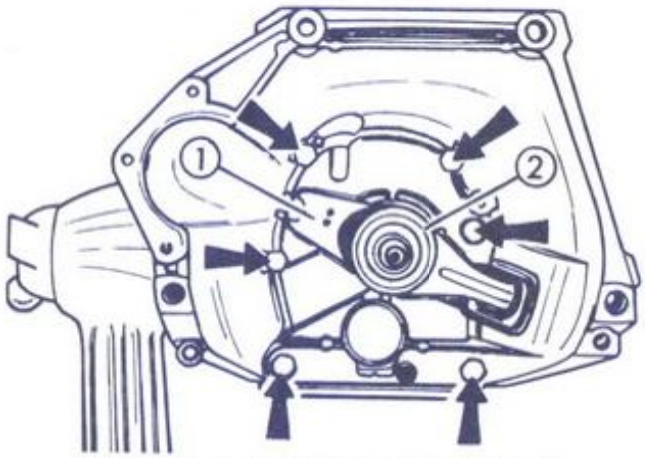

FIG 6:7 Gearbox bellhousing removal

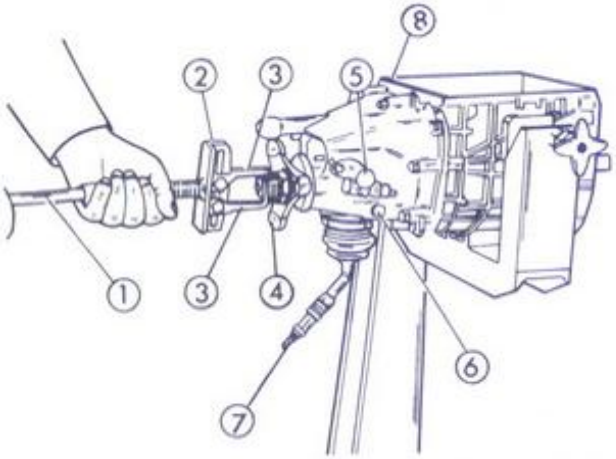

FIG 6:8 Removing centralising ring from mainshaft

Key to Fig 6:8 1 Slide hammer 2 Puller body 3 Puller arms 4 Centralising ring 5 Speedometer drive assembly 6 Bolt retaining gearlever spring 7 Gearlever 8 Rear extension housing

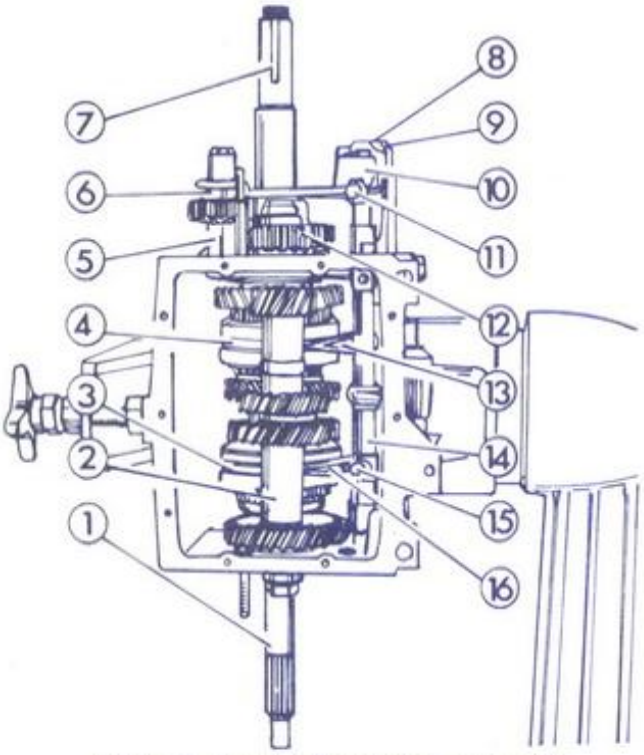

FIG 6:9 Gearbox internal components

Key to Fig 6:9 1 Input shaft 2 Layshaft 3 Third and fourth gear synchromesh 4 First and second gear synchromesh 5 Reverse idler shaft 6 Reverse idler gear 7 Mainshaft 8 Reverse selector rod 9 Third and fourth selector rod 10 Reverse selector fork 11 Lockscrew 12 Reverse drive gear 13 First and second fork 14 Third and fourth selector rod 15 Lockscrew 16 Third and fourth selector fork

FIG 6:6. Push gearlever 1 downwards and lever out the snap ring from the seat on the lever. Remove gearlever upper part and remove boot 2. Disconnect connector 4 for fast-idle switch on transmission, then remove grommet 3 and push connector 4 through the transmission tunnel.

Raise the car to provide sufficient underbody clearance for gearbox removal. Refer to **Chapter 8** and remove the

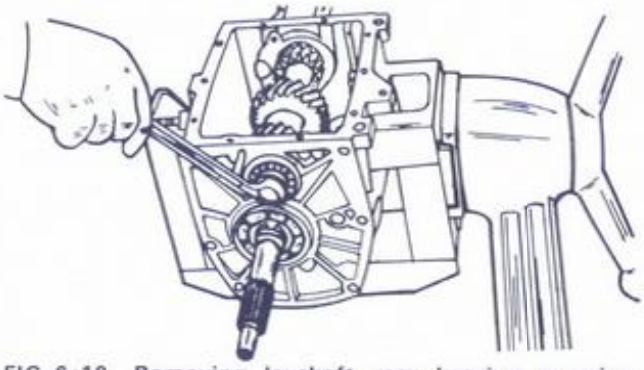

FIG 6:10 Removing layshaft rear bearing securing bolt

propeller shaft protection bracket, then disconnect the flexible coupling to detach front propeller shaft from gearbox output shaft. Disconnect the wires from the reversing light switch on the gearbox.

Use a suitable jack and adaptor to support the weight of the gearbox assembly. Place a suitable floor stand beneath the engine to support engine weight when the gearbox rear mounting is disconnected. Refer to **Chapter 12** and remove the starter motor.

Refer to **FIG 6:5**. Disconnect clutch cable and return spring 6 from the engagement lever. Disconnect the wires from the switch located on the transmission near the clutch engagement lever. Disconnect the speedometer cable from speedometer drive 3. Remove flywheel inspection cover 13. Remove the bolt securing exhaust pipe support bracket 11 to the transmission, then loosen the bolt holding the bracket to the exhaust pipe and swing the bracket clear of the work area.

Remove the gearbox crossmember and mounting 4. Remove the bolts securing the gearbox to the engine crankcase. Making sure that the gearbox is properly supported, carefully move the gearbox rearwards, tilting it as necessary to slide the input shaft from the clutch assembly. Lower the jack and remove the transmission from beneath the car. **Do not allow the weight of the gearbox to hang on the splined input shaft while it is in the clutch unit, or severe damage to the clutch driven plate and hub may occur.**

Refitting:

The gearbox is installed in the reverse order of removal. Make sure that all attachments are tightened to the correct torque figures. Adjust clutch free play as described in **Chapter 5** and check gearbox oil level as described in **Section 6:2**.

Removal, 2000 models:

Gearbox removal is basically similar to the procedure described above, but the gearlever and its surrounds are different. The removal of the tunnel covering and the gearlever support is described in **Section 6:6**.

6:4 Four-speed gearbox overhaul

The use of rotating stand Ar.2204 and bracket A.71001/19 as shown in the accompanying illustrations is recommended, if these tools are available. If not, support the gearbox in the appropriate attitudes using suitable blocks of wood.

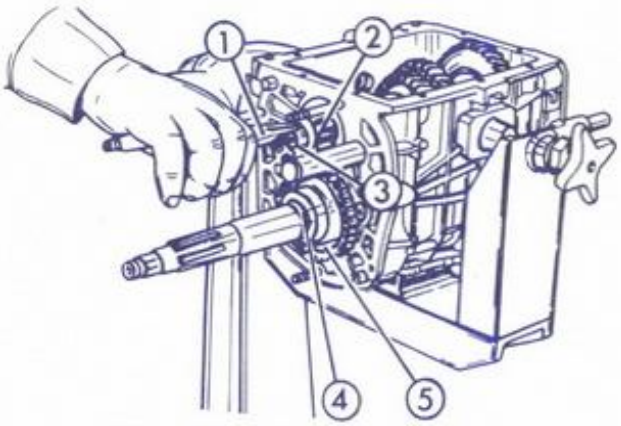

FIG 6:11 Removing reverse gears

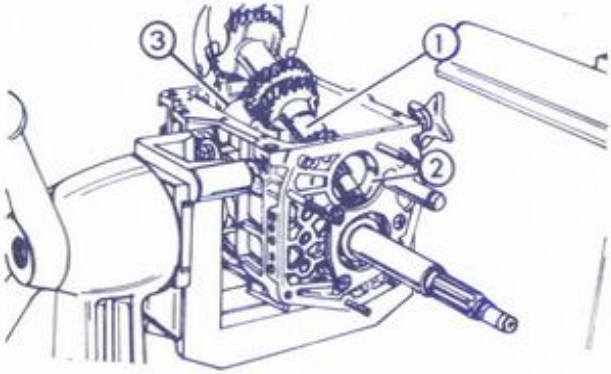

FIG 6:12 Layshaft removal

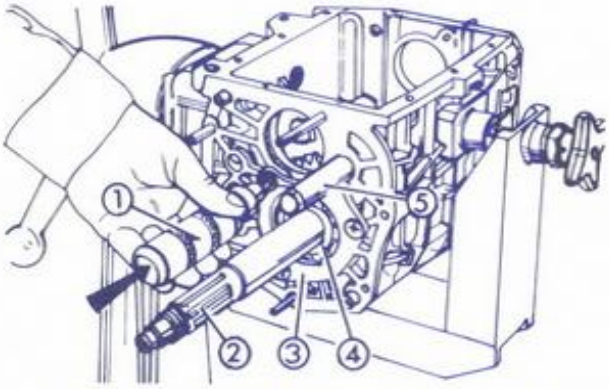

FIG 6:13 Bearing retainer plate removal

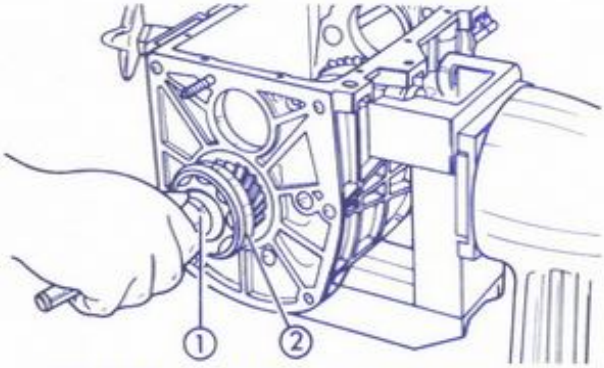

FIG 6:14 Input shaft and bearing removal

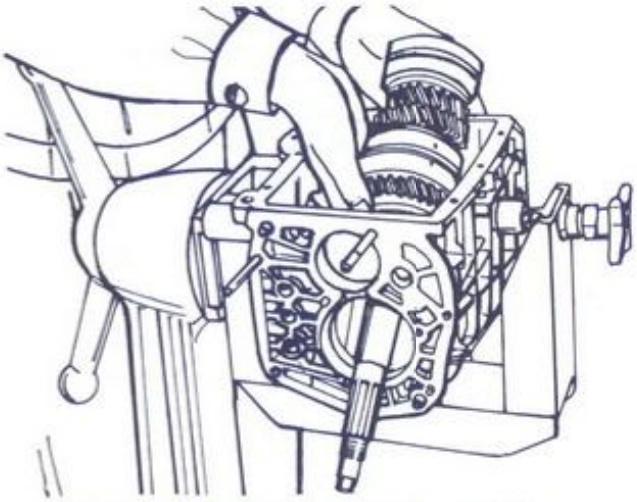

FIG 6:15 Removing mainshaft assembly

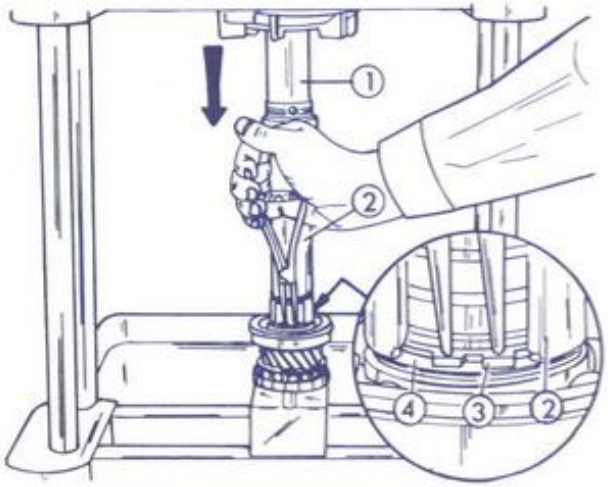

FIG 6:17 Removing input shaft bearing circlip

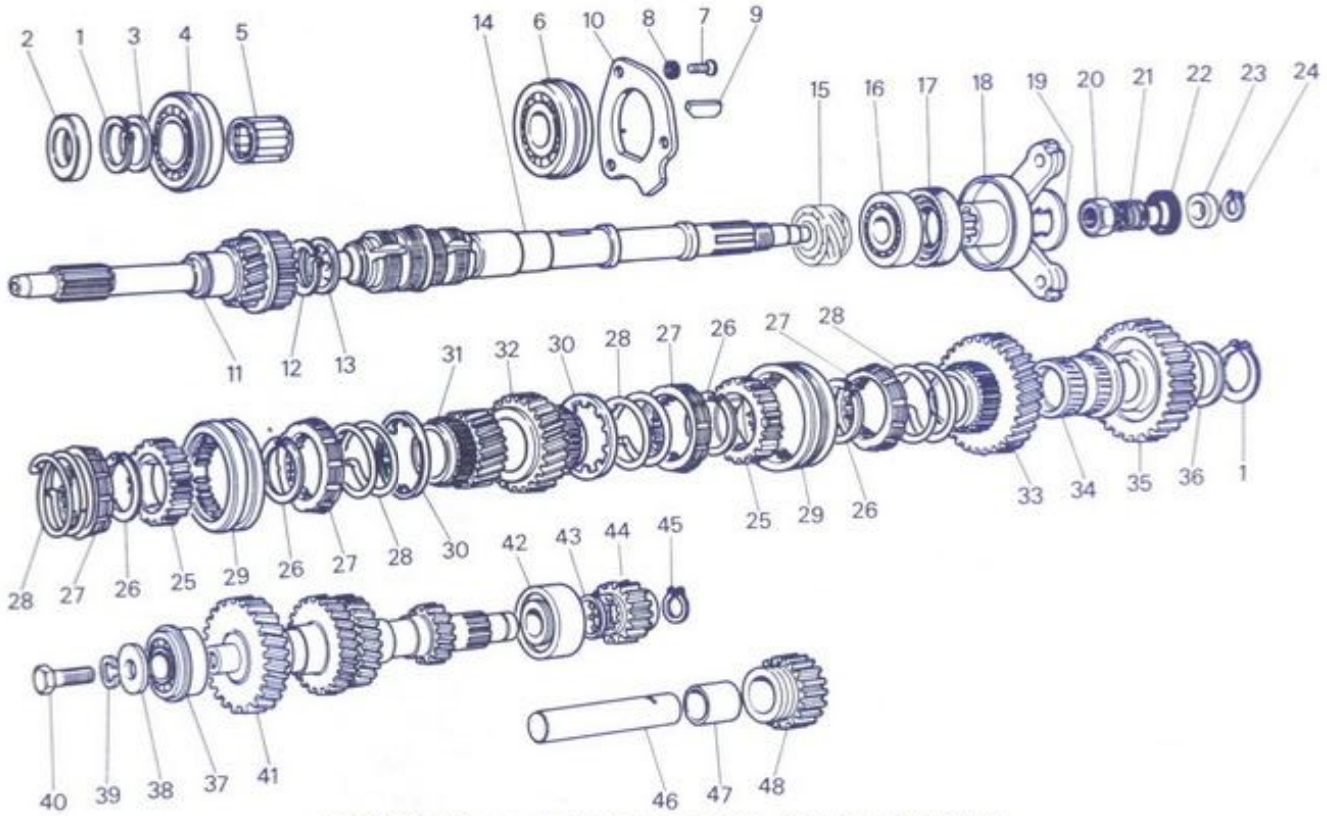

FIG 6:16 Gear and shaft components, four-speed gearbox

Key to Fig 6:16 1 Circlip 2 Seal 3 Spring washer 4 Front ballbearing 5 Cylindrical roller cage 6 Mainshaft intermediate ballbearing 7 Screw 8 Lockwasher 9 Key 10 Bearing retainer 11 Input shaft 12 Circlip 13 Spring washer 14 Mainshaft 15 Speedometer drive gear 16 Mainshaft rear ballbearing 17 Seal 18 Sleeve 19 Lockplate 20 Nut 21 Spring 22 Seal 23 Ring 24 Circlip 25 Hub 26 Circlip 27 Synchroniser 28 Spring 29 Sleeve 30 Disc 31 Third gear 32 Second gear 33 First gear 34 Bushing 35 Reverse driven gear 36 Spring washer 37 Countershaft front ballbearing 38 Flat washer 39 Lockwasher 40 Screw 41 Countershaft 42 Countershaft rear roller bearing 43 Spring washer 44 Reverse drive gear 45 Circlip 46 Reverse idler gearshaft 47 Bushing 48 Reverse idler gear

Remove the flexible coupling from gearbox splined sleeve. If not previously removed, detach crossmember and mounting from extension housing. Refer to **FIG 6:7** and remove clutch release lever 1 and slide off bearing and sleeve 2 from input shaft. Remove the six bolts arrowed and detach the bellhousing from gearbox case. Remove the gearbox lower cover complete with gasket.

Refer to **FIG 6:8**. Use a suitable pair of circlip pliers to remove the circlip retaining centralising ring 4 to the mainshaft. Use slide hammer A.40206/801 and puller with arms A.40005/109/136 as shown at 1, 2 and 3, or other suitable tools, to pull the centralising ring from the shaft. Remove the nut securing the flexible coupling connector to the mainshaft, then remove the connector. Remove the fixing nuts and detach speedometer drive assembly 5. Remove bolt 6 which retains the gearlever return spring, then remove the fixing nuts and detach the gearlever assembly 7 from the extension housing. With the gearlever fully removed so that the selector rods are disengaged, remove the fixing bolts and detach extension housing 8 from the main case.

Refer to **FIG 6:9**. Remove lockscrew 15 to free fork 16, then move forks 13 and 16 to simultaneously engage two gears. This will lock the shafts against rotation. Remove the layshaft rear bearing securing bolt as shown in **FIG 6:10**.

Remove reverse selector fork lockscrew shown at 11 in **FIG 6:9** then slide off reverse selector fork 10 together with reverse idler gear 6. Slide out third and top gear selector rod 14 and remove selector fork 16. Remove lockscrew for first and second selector fork 13, then slide out first and second gear selector rod and remove the selector fork. Collect the plungers, balls and springs released during selector mechanism removal.

Refer to **FIG 6:11**. Use suitable circlip pliers 1 to remove circlip retaining reverse drive gear 2 on layshaft 3, then remove the gear. Similarly, remove circlip 4 and remove reverse drive gear 5 from the mainshaft. Remove layshaft 1 from front and rear bearing housings 2 and 3, as shown in **FIG 6:12**. Use a suitable impact screwdriver, such as A.81011, as shown at 1 in **FIG 6:13**, to remove the screws securing bearing plate retainer 3. Remove ballbearing 4 from mainshaft 2 and remove reverse idler shaft 5. Remove input shaft 1 complete with ballbearing 2 as shown in **FIG 6:14**. Remove the mainshaft assembly from the gearbox case as shown in **FIG 6:15**.

Dismantling gear assemblies:

FIG 6:16 shows gears, synchromesh units and bearings used on four-speed gearbox assemblies. To remove the bearing from the input shaft, refer to **FIG 6:17** and use a press 1 in conjunction with tool A.70158 as shown at 2 to compress the Belleville (spring) washer. With the washer 4 compressed, use suitable circlip pliers to remove circlip 3. This done, invert the input shaft assembly and remove the circlip retaining the top gear synchromesh baulk ring. The mainshaft components can be dismantled after removal of the circlips, but a press and tool A.70158 must be used to compress the spring washer retaining third- and four-speed synchromesh unit, in the same manner as that for the input shaft bearing circlip as shown in **FIG 6:17**. Care should be taken not to intermix the synchromesh baulk rings as they will have mated with the gears and synchromesh units. Remove

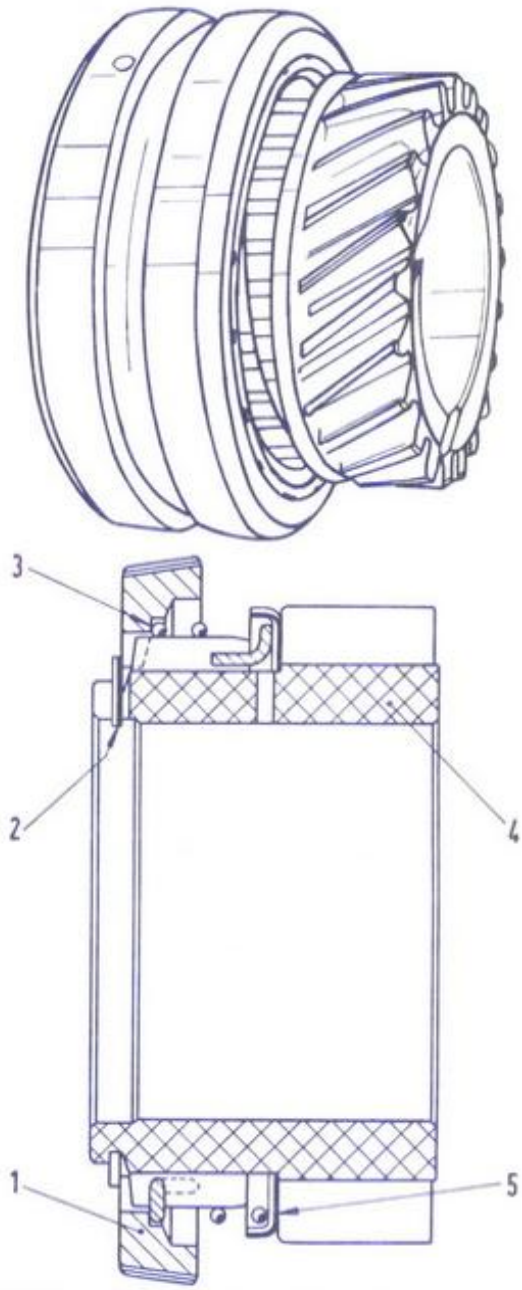

FIG 6:18 Five-speed gearbox synchromesh unit assembled (above) and in cross section (below)

Key to Fig 6:18 1 Baulk ring 2 Circlip 3 Spring 4 Gear 5 Disc

the synchromesh units complete without dismantling them. Before dismantling synchromesh units, wrap wrap them in a cloth to catch all the parts then press the outer sleeve from the inner hub. The components and assembly of synchromesh units are shown in **FIGS 6:18** and **6:19**.

Inspection:

Wash all the parts in a suitable solvent such as petrol or paraffin, then dry them thoroughly. If compressed air or a tyre pump is not available, allow the parts to air dry or wipe them dry with a lint-free cloth. **When drying bearings with compressed air, take care not to allow them to spin as this will damage the faces.**

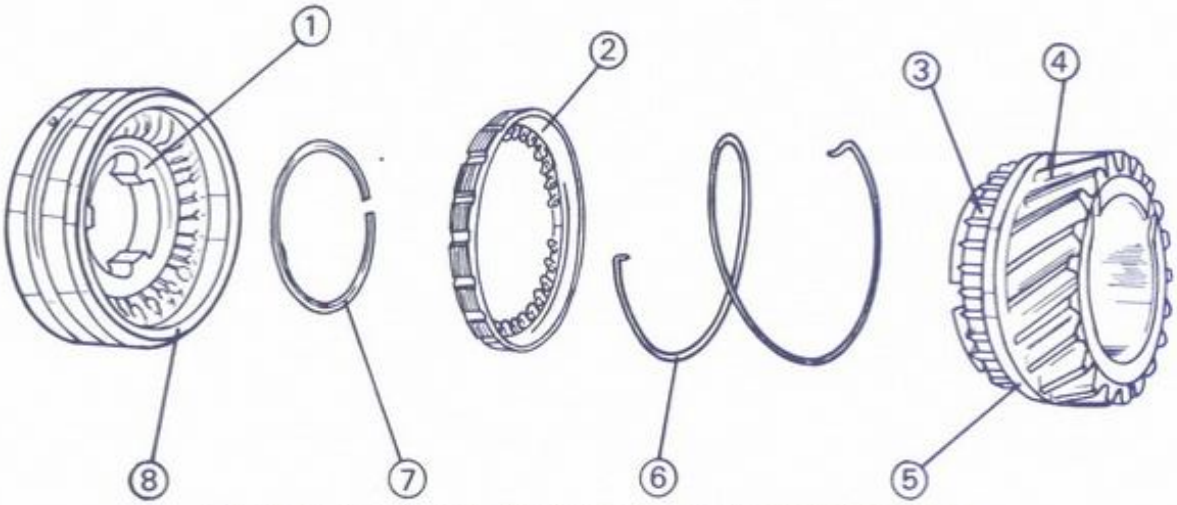

FIG 6:19 Components of a five-speed gearbox synchromesh unit

Key to Fig 6:19 1 Hub 2 Baulk ring 3 Engagement teeth 4 Gear 5 Disc 6 Spring 7 Circlip 8 Sleeve

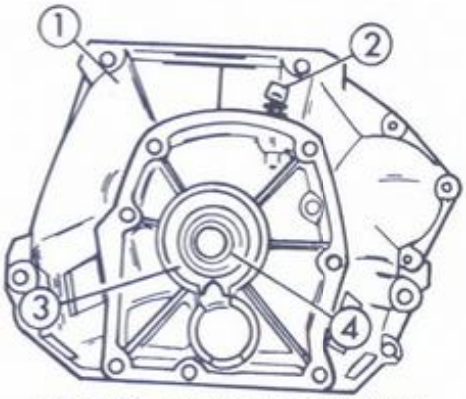

FIG 6:20 Inspecting bellhousing

Key to Fig 6:20 1 Bellhousing 2 Breather 3 Input shaft neck 4 Seal

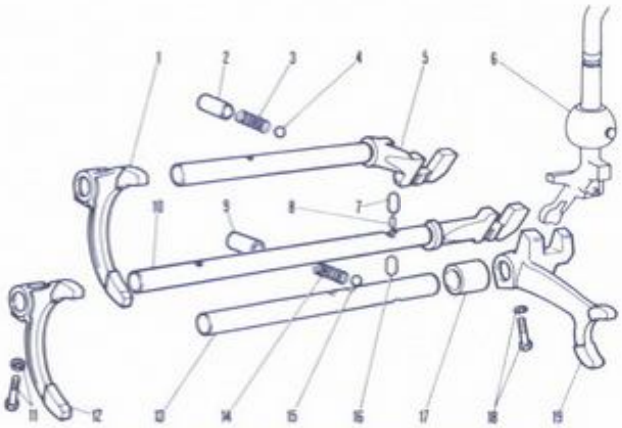

FIG 6:21 Four-speed selector mechanism

Key to Fig 6:21 1 First and second selector fork 2 Bush 3 Spring 4 Detent ball 5 First and second selector rod 6 Gearlever 7 First and second gear roller 8 Third and fourth selector rod roller 9 Bush 10 Third and fourth selector rod 11 Screw and spring washer 12 Third and fourth selector fork 13 Reverse selector rod 14 Spring 15 Detent ball 16 Reverse selector rod roller 17 Spacer 18 Screw and spring washer 19 Reverse selector fork

Discard all old gaskets and seals and use new ones on reassembly. If the old gaskets or seals must be used again, wipe them clean but do not wash or moisten them with any harsh solvent. Old sealing compound should be softened with a suitable solvent then scraped off with a piece of wood or plastic.

Check the mating faces of the castings and covers for nicks, burrs or other damage. Light damage can be cleaned off by careful use of a scraper, fine file or oilstone. At the same time check all castings for cracks and for damaged studs or threads. Refer to **FIG 6:20** and check the condition of the input shaft neck 3 in the bellhousing 1 and make sure that this will allow free rotation of the shaft. Make sure that the breather 2 is clear, washing with solvent if necessary.

Oil the bearings with thin oil and spin them with the fingers to check for roughness in operation. Roughness can be caused by small specks of dirt, so wash the bearings again if they feel rough. Check the faces of each race for damage such as fret marks, scores, pitting or wear. If the condition of a bearing is at all in doubt it should be renewed.

Examine all gears for broken or worn teeth, including the baulk ring teeth. If a tooth is found broken or damaged, pay particular attention to the teeth of the mating gear. Renew any damaged parts.

Check the shafts for fret marks, wear or other damage and check that all splines are unworn and undamaged. Bushes must rotate freely on the shafts and hubs must slide freely on the splines. The mainshaft should be supported between centres and checked for runout with a dial gauge. If the runout on mainshaft or countershaft exceeds 0.025mm (0.001in) a new shaft should be fitted. Check all clearances and renew parts as required to bring clearances within limits. All gears should have a clearance of 0.05 to 0.10mm (0.002 to 0.004in) on the shafts, with a maximum permissible clearance of 0.15mm (0.006in). The fitting clearance between the groove flanks of the synchromesh sliding sleeves should be 0.07 to 0.16mm (0.0027 to 0.0063in), with a maximum allowable clearance of 0.2mm (0.0079in).

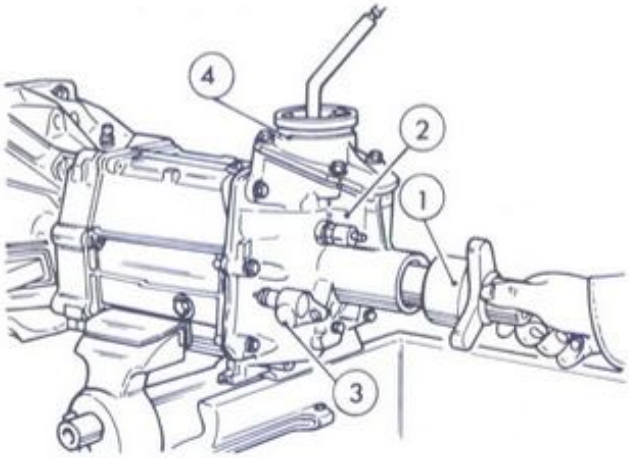

FIG 6:22 Removing rear housing components

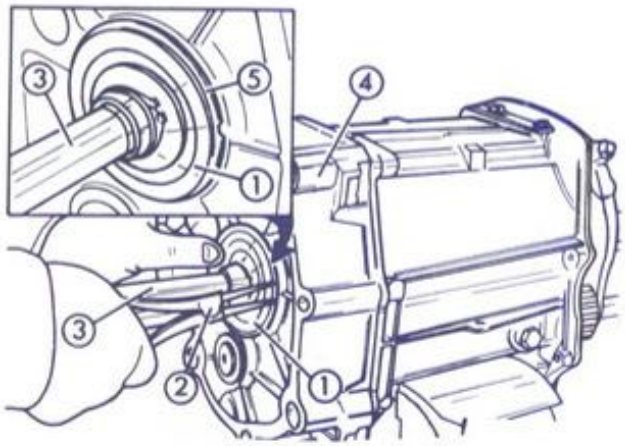

FIG 6:25 Removing bearing outer circlip

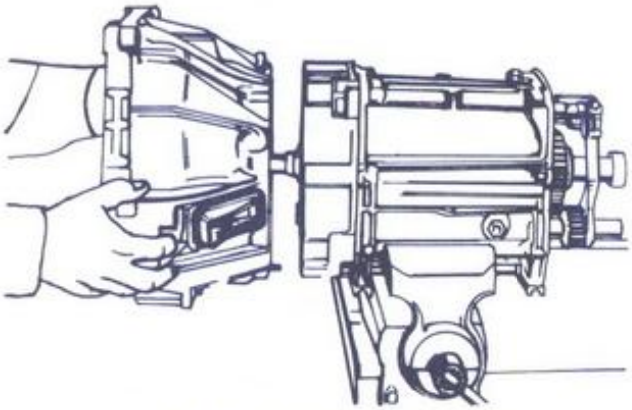

FIG 6:23 Removing bellhousing

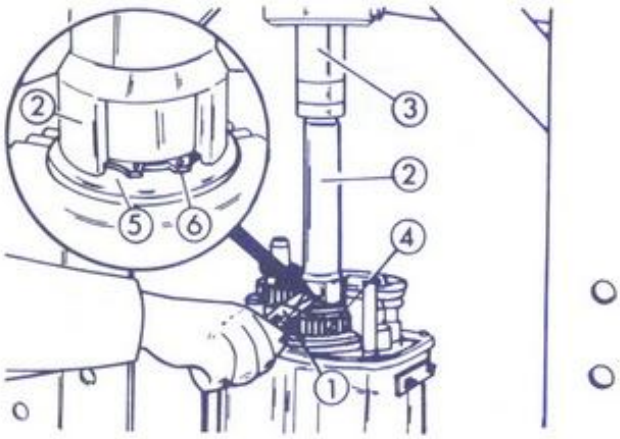

FIG 6:26 Removing circlip retaining reverse gear

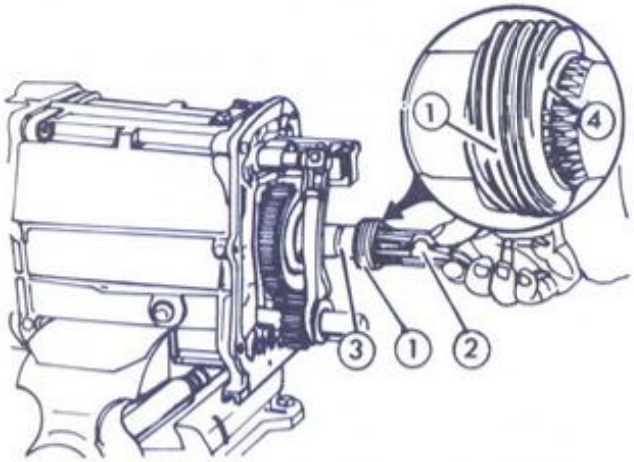

FIG 6:24 Speedometer drive gear removal

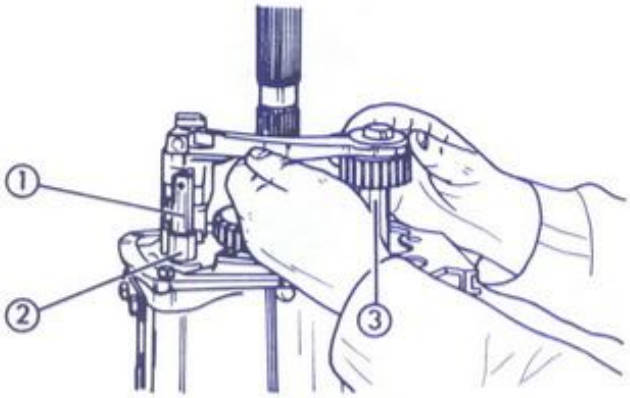

FIG 6:27 Removing reverse idler gear and selector fork

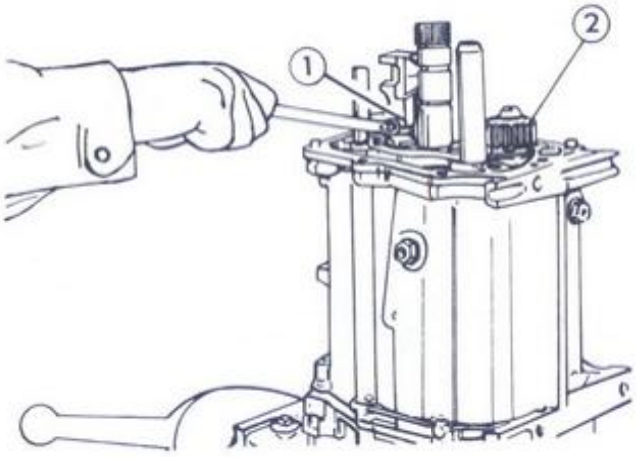

FIG 6:28 Removing reverse drive gear

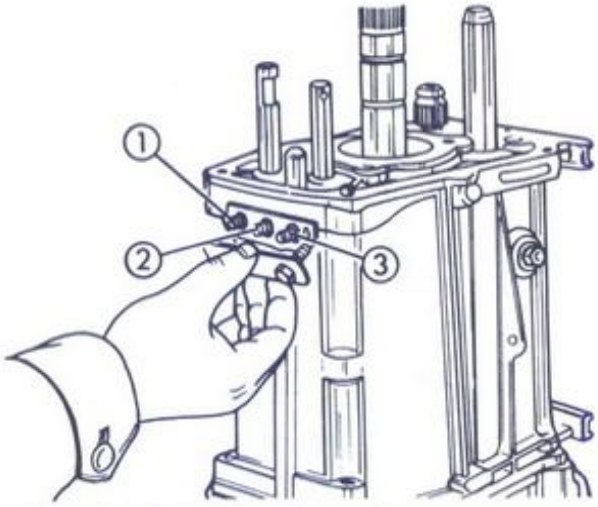

FIG 6:29 Removing selector detent components

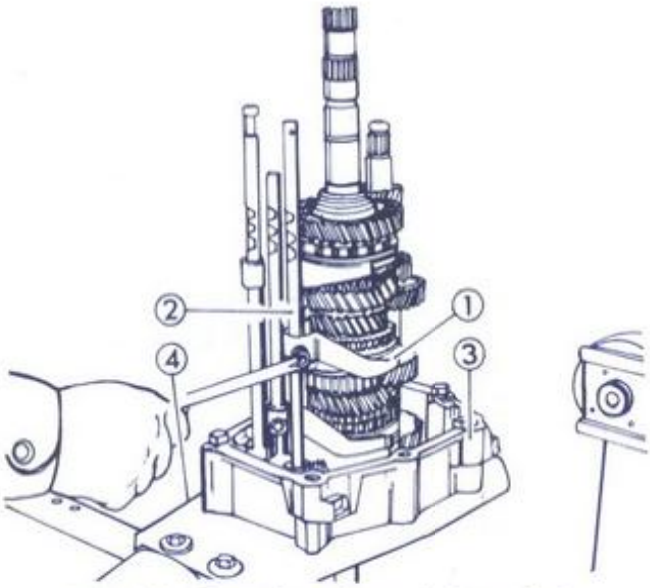

FIG 6:30 Removing selector forks and rods

As a safety precaution, new circlips should be used on reassembly. Avoid spreading the circlips excessively and wherever possible use a suitable hollow drift to drive them back into position. Parts must be assembled scrupulously clean and they should be lubricated with SAE 90 oil as they are fitted. When reassembling synchromesh units, make sure that the ends of the springs shown at 6 in **FIG 6:19** are positioned between dog teeth without changing spring diameter significantly, before the circlip 7 is installed.

Reassembly:

The gearbox is reassembled in the reverse order of dismantling. All attachments, nuts and bolts should be tightened to the correct torque figures. When reassembling the selector mechanism, make sure that the detent springs, balls and rollers are correctly installed as shown in **FIG 6:21**. When installing the extension housing and gearlever, make sure that the gearlever return spring is correctly fitted and that the end of the gearlever correctly engages with the selector rods. Check that all gears can be smoothly and fully engaged. Note that the nut securing the flexible coupling connector and sliding sleeve assembly must be tightened to a torque of 8kgm (58lb ft).

6:5 Five-speed gearbox overhaul

For preliminary dismantling procedures to be carried out, the gearbox should be supported in a large vice equipped with padded jaws. For later stages of dismantling, stand Ar.22204 and bracket A.71001/20 should be used if available, as shown in the accompanying illustrations. If not, the gearbox should be held in the appropriate attitudes on suitable blocks of wood.

Refer to **FIG 6:22**. Remove the yoke 1 by pulling from the output shaft. Remove the fixing bolt and washer, then detach speedometer drive assembly 3. Remove the four bolts and washers then detach gearchange support assembly 4. Remove the seven bolts and washers securing the rear housing 2 to the main gearbox case, noting that one bolt is installed on the main case side. Tap the rear housing with a soft-faced hammer to free it, then pull the housing from the output shaft. Remove and discard the gasket.

Disengage the clutch release lever from the ball pivot, then remove the release bearing support and release lever. Remove the seven bolts and washers from inside the bellhousing, then remove the bellhousing from the main case (see **FIG 6:23**). Using suitable circlip pliers 2 (see **FIG 6:24**), remove circlip 4 retaining speedometer drive gear 1 to output shaft 3. Pull the drive gear from the shaft. Use circlip pliers 2 (see **FIG 6:25**) to remove outer circlip 5 securing ballbearing 1 in front housing 4. Remove input shaft 3 complete with bearing 1 from the front housing.

In order to remove the circlip retaining reverse gear to the shaft, it is necessary to use tool A.70350 in conjunction with press equipment, as shown in **FIG 6:26**. Place the special tool 2 on the Belleville (spring) washer 5 and apply load by means of press 3 to compress the washer. Use suitable circlip pliers 1 to release circlip 6 which retains reverse gear 4. This done, remove the bolt and lockwasher holding reverse selector fork to selector

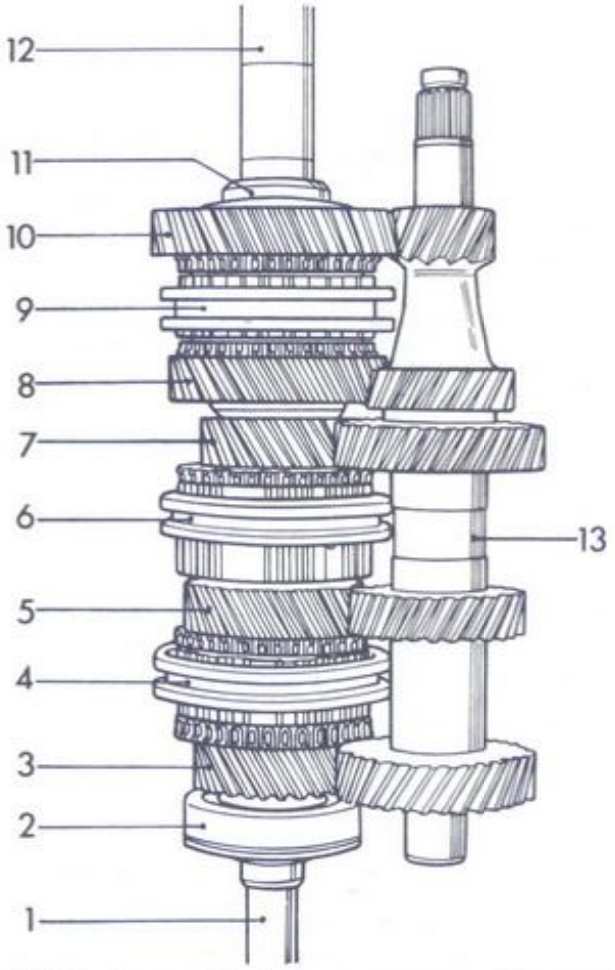

FIG 6:31 Gear and shaft components, five-speed gearbox

Key to Fig 6:31 1 Input shaft 2 Bearing 3 Fourth gear 4 Third and fourth gear synchromesh 5 Third gear 6 Fifth gear synchromesh 7 Fifth gear 8 Second gear 9 First and second gear synchromesh 10 First gear 11 Bearing outer race 12 Mainshaft 13 Layshaft

rod 1 (see **FIG 6:27**) then lift off the fork and reverse idler gear 3. Remove spacer 2 from the selector rod. Remove reverse gear from the mainshaft.

Remove bolt and lockwasher holding extension 1 (see **FIG 6:28**) to third and fourth gear selector rod, then remove the extension. Remove circlip holding reverse drive gear 2 on the layshaft, then remove the gear and washer.

Refer to **FIG 6:29**. Remove the two bolts and detach the detent mechanism cover. Remote detent springs and balls for first and second selector rod 1, third and fourth selector rod 2 and fifth and reverse selector rod 3. Detach the main gearbox case from the front housing, then slide the main housing from the shafts and selector rods to remove.

Refer to **FIG 6:30**. With the front housing 3 on a suitable support 4, remove the bolts and lockwashers holding selector forks 1 to selector rods 2. Remove the forks and rods, then refit the bolts and lockwashers to retain the forks to their respective rods. Keeping the gears in mesh, lift out mainshaft 5 and layshaft 6 together.

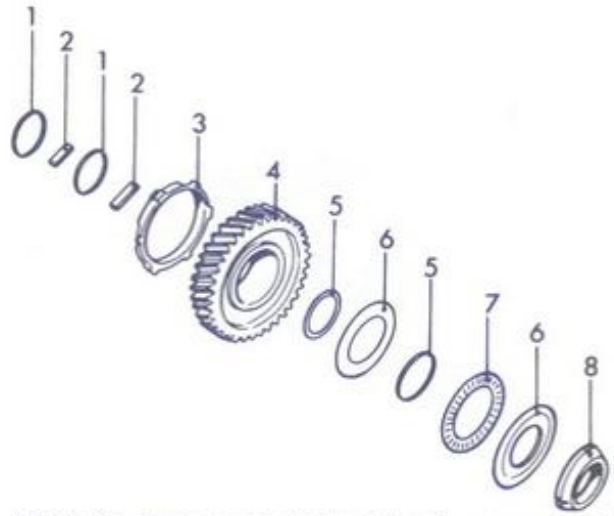

FIG 6:32 First gear and thrust bearing components

Key to Fig 6:32 1 Spacers 2 Roller bearings 3 Synchroniser ring 4 First gear 5 Flat washers 6 Thrust washers 7 Thrust bearing 8 Outer race

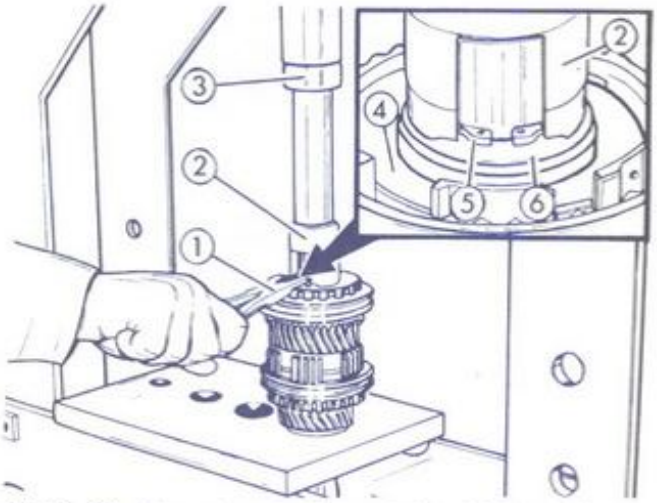

FIG 6:33 Removing circlip retaining third and fourth gear synchroniser

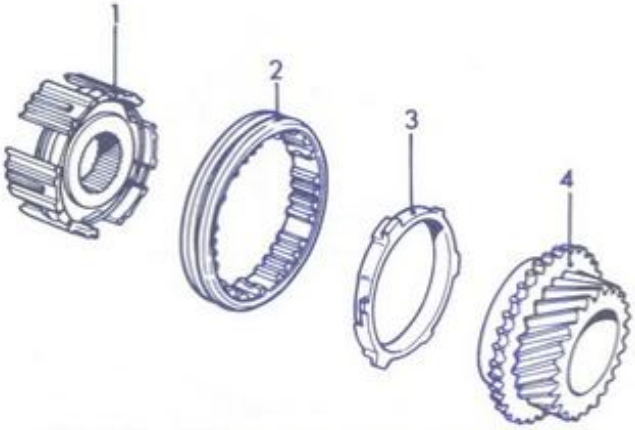

FIG 6:34 Fifth gear synchromesh components

Key to Fig 6:34 1 Hub assembly 2 Sliding sleeve 3 Synchroniser ring 4 Fifth gear

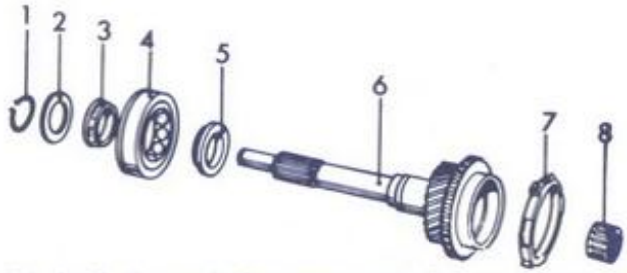

FIG 6:35 Input shaft components, five-speed gearbox

Key to Fig 6:35 1 Circlip 2 Belleville (spring) washer 3 Split race 4 Bearing 5 Split race 6 Input shaft 7 Synchroniser ring 8 Bearing

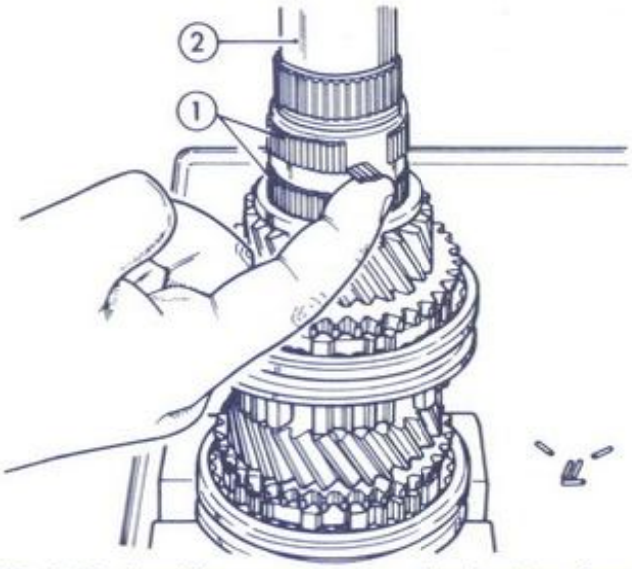

FIG 6:36 Installing second gear roller bearings 1 on mainshaft 2

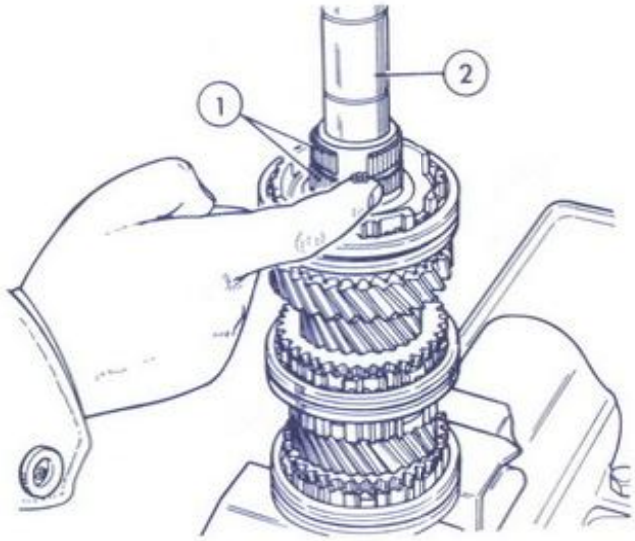

FIG 6:37 Installing first gear roller bearings 1 on mainshaft 2

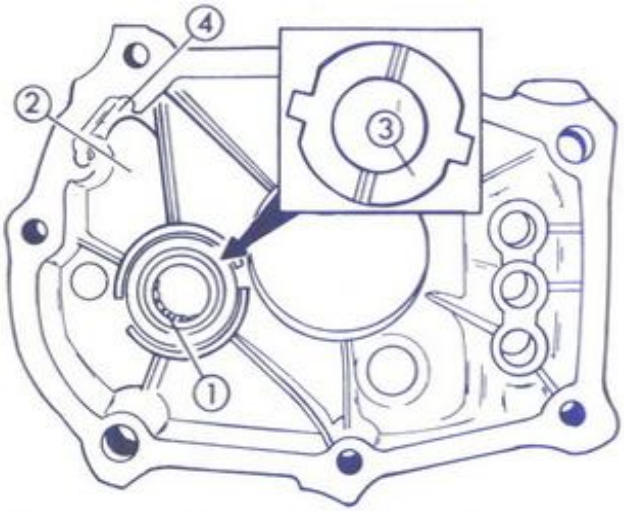

FIG 6:38 Installing layshaft bearing washer and magnet

Dismantling gear assemblies:

FIG 6:31 shows gear and shaft components for the five-speed gearbox. Use two screwdrivers to lever off bearing split race 11, fitting the screwdriver blades beneath the race on opposite sides and levering equally. Slide first gear 10, complete with outer race for thrust bearing, thrust bearing, inner race and thrust washer from the mainshaft 12. The individual components are shown in **FIG 6:32**. Remove the roller bearings (total 122) from the shaft, then remove the bearing spacer. Remove the circlip retaining first and second gear synchroniser 9 (see **FIG 6:31**). Place the mainshaft in a press with supports beneath second gear 8, then press down on mainshaft 12 to remove hub, synchroniser ring, gear and washers from the shaft. Remove the roller bearings (total 134) from the shaft. Invert the shaft (see **FIG 6:33**) then use tool A.70159 (2) in conjunction with press 3 to compress Belleville (spring) washer 6. Use suitable circlip pliers 1 to remove circlip 5 securing third and fourth gear synchroniser 4 to the shaft. This done, remove hub for third and fourth gear synchroniser, shown at 4 in **FIG 6:31**, using a suitable puller. Remove third gear 5 from the shaft. Remove the circlip holding the hub for fifth gear synchroniser 6, then remove the synchroniser using a suitable puller. Remove fifth gear 7.

Care should be taken not to intermix the synchromesh components as each part will have mated with its associated components and the gear which it serves. Synchromesh components are shown in **FIG 6:34**, those for fifth gear being illustrated.

The ballbearing should be removed from the input shaft (see **FIG 6:35**) in a similar manner to that shown for four-speed units in **FIG 6:17**, but using tool A.70350 at 2. Use the tool in conjunction with a press to compress Belleville (spring) washer 4 then release circlip 3 using suitable circlip pliers. This done, remove the bearing from the shaft using a suitable puller.

Inspection:

Inspect the gearbox components in the manner described for four-speed gearbox units in **Section 6:4**, as procedures, clearances and wear limits are similar for five-speed gearbox components.

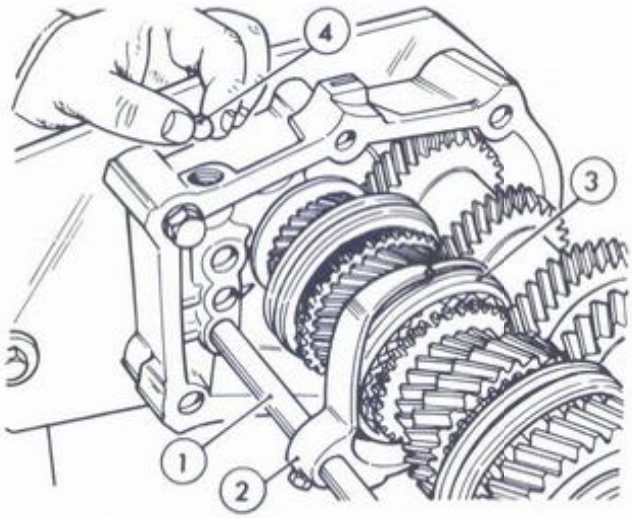

FIG 6:39 Installing fifth gear selector mechanism

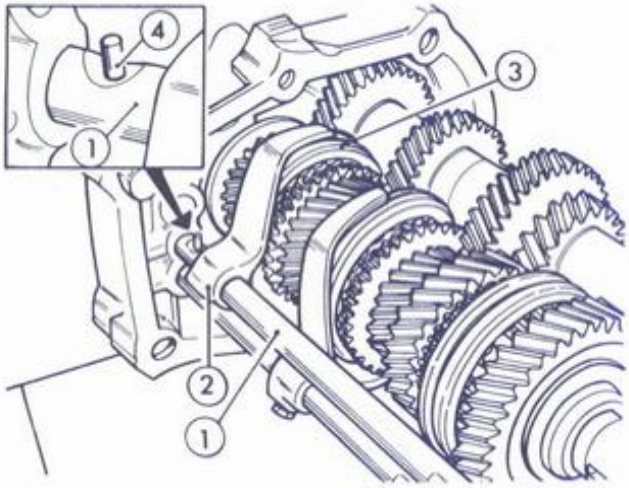

FIG 6:40 Installing third and fourth gear selector mechanism

Reassembly:

The gearbox is reassembled in the reverse order of dismantling, noting the points given in the following paragraphs. All attachments, nuts and bolts should be tightened to the correct torque figures.

After third gear and synchromesh assembly have been fitted, install the two rows of roller bearings, 67 rollers to each row, on the shaft. Use a thin smear of grease to retain the rollers in position (see **FIG 6:36**). After installing second gear and synchroniser assembly for first and second gear, place the flat washer on the mainshaft then install the two rows of roller bearings, 61 rollers to each row, on the mainshaft. Use a thin smear of grease to retain the rollers (see **FIG 6:37**). Install first gear and thrust bearing components in the order shown in **FIG 6:32**.

Before installing the fully assembled mainshaft together with layshaft to the housing, place washer 3 (see **FIG 6:38**) on the layshaft bearing 1, making sure the grooves on the washer are upwards. Make sure that the magnet 4 is correctly fitted in case 2, with the magnetic face towards the gears. Mesh the mainshaft and layshaft gears correctly, then install the shafts in the housing.

Remove the Allen screw from the front housing. Refer to **FIG 6:39** and fit selector rod 1 and selector fork 2 to third gear 3. Do not tighten the bolt securing the fork to the rod at this stage. Install the detent ball 4 through the Allen screw hole. Fit third and fourth gear selector rod 1 (see **FIG 6:40**) and fork 2, engaging the fork in the sliding sleeve 3. Before the rod is fully installed in the case, insert detent pin 4 in the rod (see inset). With the rod fully installed, install the second detent ball through the Allen screw hole. Do not tighten the selector fork lockbolt at this stage. Install first and second gear selector rod 1 (see **FIG 6:41**) and fork 2, engaging the fork in the sleeve grooves 3. Fit and tighten the Allen screw, then tighten the bolts securing the selector forks to the rods.

Make sure that layshaft bearing 1 (see **FIG 6:42**) and mainshaft bearing 2 are correctly fitted in the main case 3. Install washer 4 to layshaft bearing 1, making sure that the grooved surface of the washer faces away from the bearing. If necessary, retain the washer in place with a

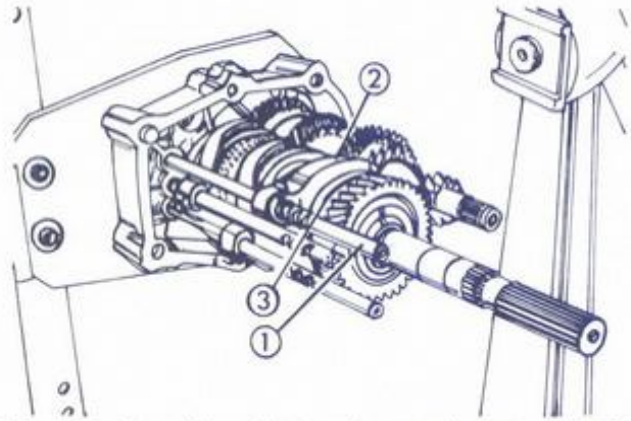

FIG 6:41 Installing first and second gear selector mechanism

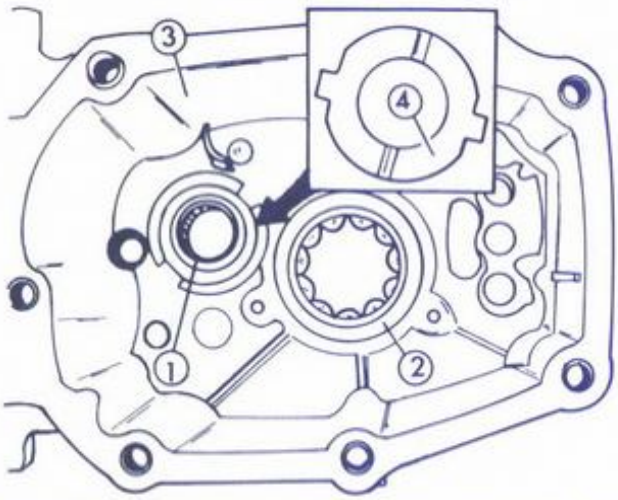

FIG 6:42 Installing layshaft bearing washer in main case

thin smear of grease. Fit the main case with new gasket over the shafts and selector rods. Fit the outer race for the mainshaft bearing, then tap the outer race downwards with a brass drift. Fit the washer and retainer plate to the shaft. Fit reverse idler gearshaft, place the tab on the retainer plate in the groove on the shaft, then secure the plate with the four screws. Fit the detent balls and springs to the case, then install the retaining cover and tighten the bolts (see **FIG 6 : 29**).

Refit the remaining components in the reverse order of removal, using new gaskets throughout. Make sure that the gearlever spring in the rear housing is correctly installed, as shown in **FIG 6 : 43**. When assembly is complete, operate the gearlever to make sure that all gears can be smoothly and fully engaged.

6 : 6 Gearlever support, 2000 models

Removal :

Remove the gearlever knob and the rubber boot below it. Remove the ashtray from the tunnel cover and the two centre air vents. Disconnect the light cables. Remove the two screws which secure the cover ; one is at the rear, the other is in the ashtray recess. Pull up the handbrake lever and lift the cover away from the rear. Disconnect the cigar lighter leads.

The gearbox guard panel below the cover is secured by five bolts and a circlip secures the cylindrical rubber boot : remove these and lift off the gearbox guard panel. The gearlever support is now exposed as shown in **FIG 6 : 44**, and can be removed after removing the four securing screws 1.

The bottom cover over the lower end of the gearlever can be removed by taking out the four retaining bolts (see **FIG 6 : 45**) and the gearlever disconnected from its seat by pulling in the direction of the arrow.

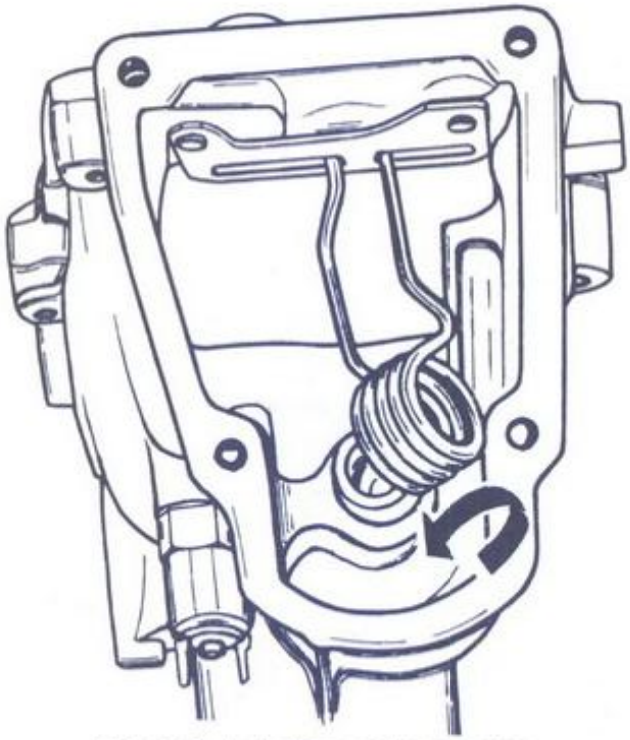

FIG 6 : 43 Installing gearlever spring

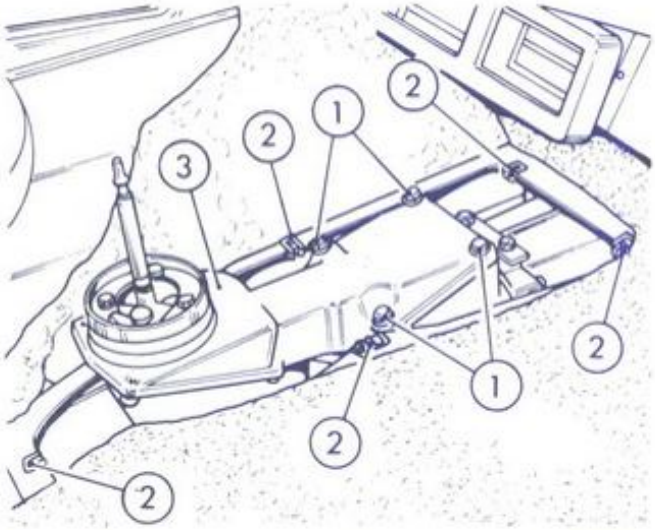

FIG 6 : 44 Removing the gearlever support on 2000 OHC engine models

Key to Fig 6 : 44 1 Securing screws 2 Guard retainers 3 Gearlever support

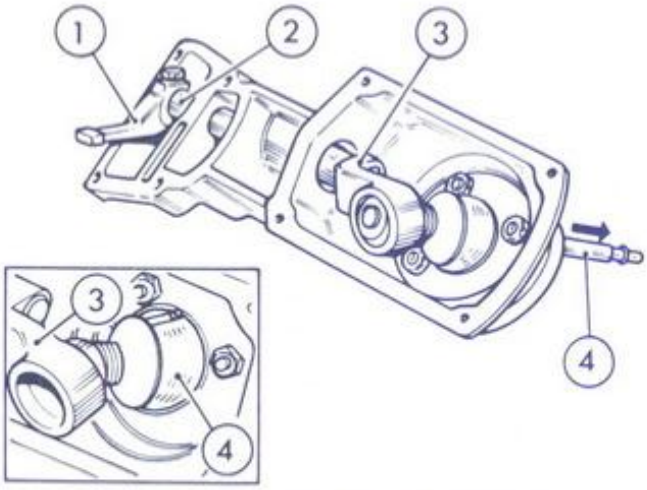

FIG 6 : 45 Dismantling the gearlever support

Key to Fig 6 : 45 1 Gearlever end 2 Rod 3 Gearlever ball seat 4 Gearlever

6 : 7 Fault diagnosis

(a) Jumping out of gear

1 Weak, broken or incorrectly fitted detent spring
2 Detent ball broken or omitted on reassembly
3 Badly worn detent groove in selector rod
4 Worn baulk rings or synchromesh units
5 Selector fork loose on shaft
6 Worn selector forks

(b) Noisy gearbox

1 Insufficient or incorrect lubricant
2 Excessive gear or bearing clearances
3 Worn or damaged bearings
4 Worn or damaged gear teeth

(c) Oil leaks

1 Blocked breather
2 Lubricant level too high
3 Defective oil seals
4 Defective gaskets or loose attachments
5 Damaged joint faces

(d) Difficult gearchanging

1 Excessively worn clutch
2 Incorrectly adjusted clutch
3 Defective input shaft spigot bearing in crankshaft end
4 Worn synchromesh assemblies
5 Worn or damaged selector mechanism

NOTES

CHAPTER 7

AUTOMATIC TRANSMISSION

7:1 Description
7:2 Maintenance
7:3 Gear selector linkages
7:4 Transmission removal and refitting

7:1 Description

Automatic transmission is supplied as an optional extra to take the place of the usual clutch and gearbox. The automatic transmission (see **FIG 7:1**) consists of a torque converter and hydraulically controlled automatic epicyclic gearbox with three forward speeds and one reverse. In all gears the drive is through the torque converter which results in maximum flexibility, especially in top gear. The gears are selected automatically as the hydraulic control system engages clutches and/or applies a brake band in various combinations. The hydraulic control system and the torque converter assembly are supplied with pressure fluid from a pump mounted within the transmission case. A manually controlled mechanical parking pawl is incorporated so that the transmission output shaft can be locked when the vehicle is stationary.

The torque converter consists of an impeller connected through a drive plate to the engine crankshaft, a turbine which is splined to the transmission input shaft and a stator connected to the unit by a one-way clutch. The impeller, driven by the engine, transmits torque by means of the transmission fluid to the turbine which drives the automatic gearbox. The stator redirects the flow of fluid as it leaves the turbine so that it re-enters the impeller at the most effective angle.

When the engine is idling, the converter impeller is being driven slowly and the energy of the fluid leaving it is low, so little torque is imparted to the turbine. For this reason, with the engine idling and drive engaged, the vehicle will have little or no tendency to move from rest. As the throttle is opened impeller speed increases and the process of torque multiplication begins. As the turbine picks up speed and the slip between it and the impeller reduces, the torque multiplication reduces progressively until, when their speeds become substantially equal, the unit acts as a fluid coupling. In this condition, the stator is no longer required to redirect the fluid flow and the roller clutch permits it to rotate with the impeller and turbine.

The maintenance and adjustment procedures which can be carried out by a reasonably competent owner are given in this chapter. More serious performance faults which require pressure take-off points to be opened and pressure measurements taken to diagnose the fault, adjustment of the governor or clutches and band, partial or complete dismantling to replace worn or failed internal components dictate that the services of a

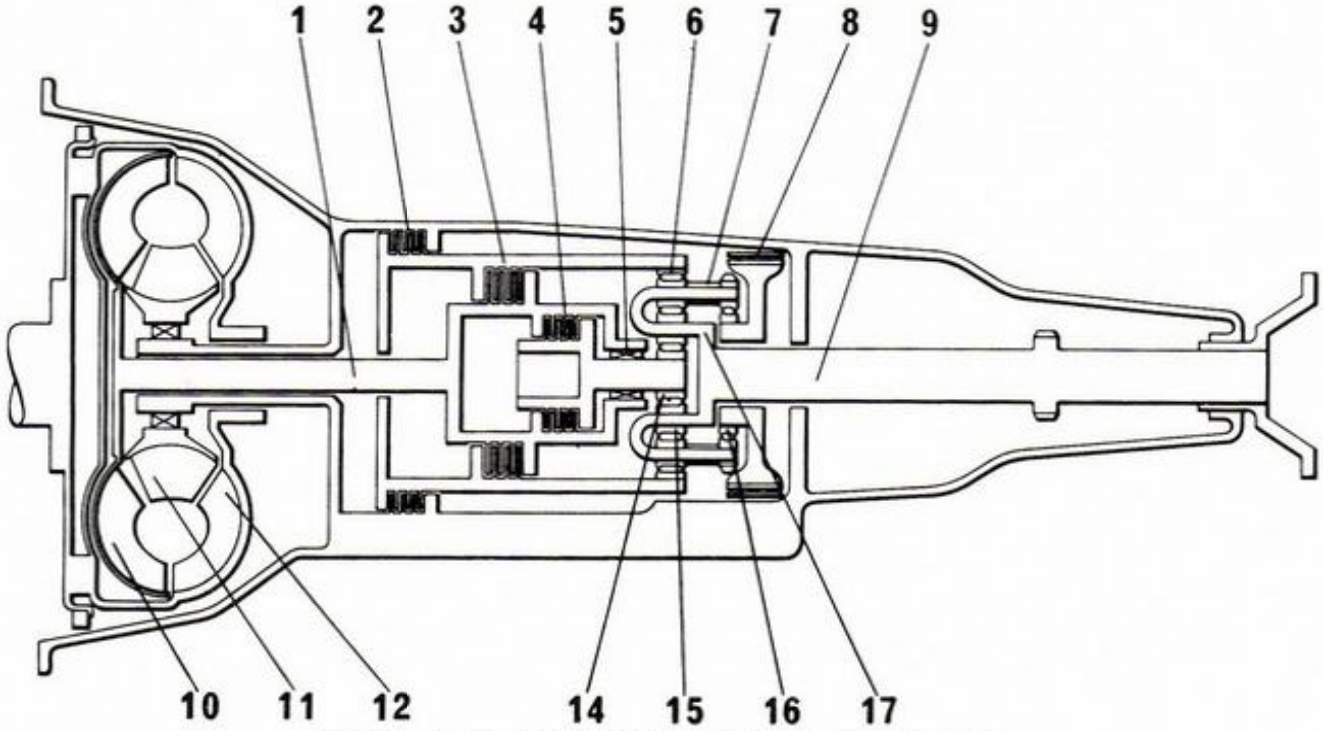

FIG 7:1 Schematic diagram of the automatic transmission

Key to Fig 7:1 1 Input shaft 2 Reverse clutch 3 Intermediate clutch 4 High clutch 5 One-way clutch 6 Ring gear 7 Long pinion gear 8 Brake band 9 Output shaft 10 Turbine 11 Stator 12 Impeller 14 Front sun gear 15 Short pinion gear 16 Rear sun gear 17 Pinion carrier

fully equipped specialist should be enlisted. Quite apart from the specialised knowledge which is required, test equipment and a large number of special tools are essential. It should be noted that the torque converter is supplied as an assembly only, no internal parts being available separately.

7:2 Maintenance

The transmission fluid should be checked at 5000km (3000 mile) or 3 monthly intervals and changed at 40,000km (24,000 mile) or 2 year intervals. More frequently under severe operating conditions.

Checking fluid level:

The car should be taken for a run of at least five miles to ensure that the automatic transmission is at normal operating temperature. Apply the handbrake, start the engine and allow it to idle in P (Park) leave the engine idling while the fluid level is checked. Remove the automatic transmission dipstick, wipe it clean on a lint-free cloth and refit it fully. Remove the dipstick again and check the level of fluid against the marks. Top up through the dipstick tube if necessary to bring the fluid level to the upper mark on the dipstick. **Do not overfill.** Use Fiat G1/A fluid or Dexron Automatic Transmission Fluid. **Never use anything but the recommended fluid in the automatic transmission.**

Changing transmission fluid:

Remove the drain plug from beneath the automatic transmission and allow the fluid to drain into a suitable container. Refit and tighten the drain plug then refill the transmission through the dipstick tube. Refill capacity is approximately 2.8 litres (4.9 Imp pints, 5.9 US pints). Add fluid slowly until the level is between the marks on the dipstick, then take the car for a run of about five miles to warm the transmission to normal operating temperature. Check the fluid level again as described previously, topping up to the upper mark on the dipstick if necessary.

7:3 Gear selector linkages

Selector linkage adjustment:

Linkage adjustment is not likely to be needed unless difficulty is encountered in gear selection, or if the transmission has been removed and refitted for servicing purposes. If adjustment is necessary, carry out the work as follows, referring to **FIGS 7:2** and **7:3**.

Make sure that the car is standing on level ground and fully apply the handbrake. Disconnect the tie rod 13 from relay lever 10 and set this in position **P** by moving the selector lever in the car fully forward. From beneath the car, set lever 14 in position **P** (fully back). To check that lever 14 is correctly in the **P** position, release the handbrake and check that the car is locked against movement by the parking pawl in the transmission. Turn nut 12 to adjust the length of rod 13 until it fits smoothly in relay lever 10 without binding. Lock nut 12 and reconnect rod 13 to the relay lever 10. Hold the lever locking catch up and move the selector lever through all six gear positions, checking that a definite click can be felt as each position is selected.

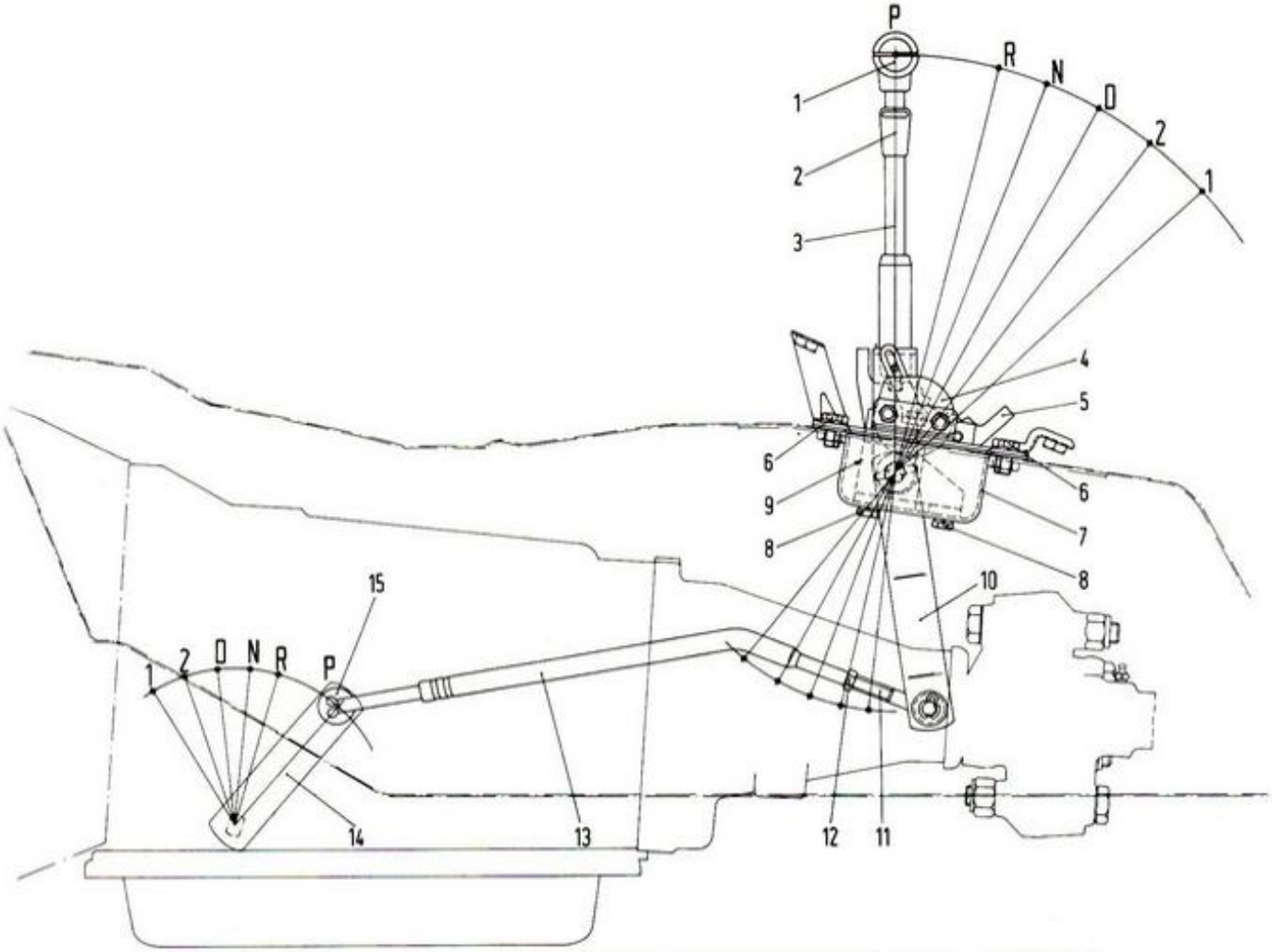

FIG 7:2 Side view of automatic transmission selector mechanism. For key see FIG 7:3

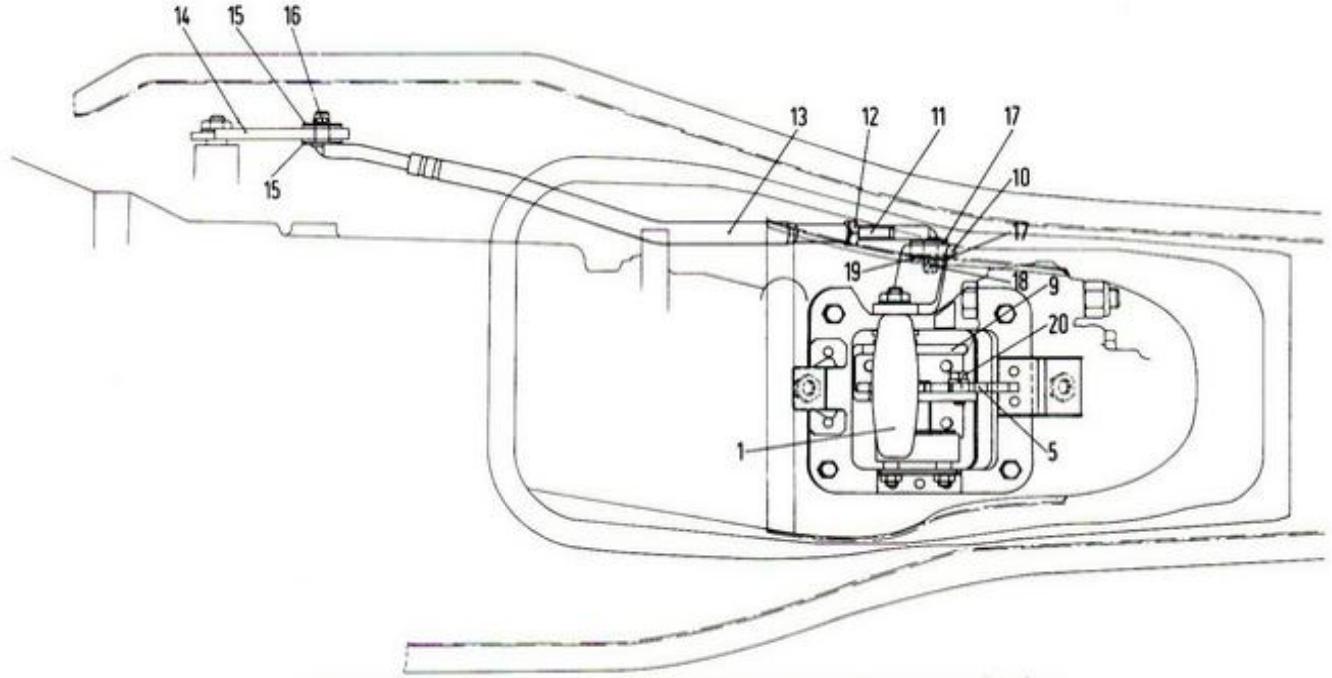

FIG 7:3 Top view of automatic transmission selector mechanism

Key to Figs 7:2 and 7:3 1 Handle 2 Release catch 3 Selector lever 4 Starter inhibitor switch 5 Gear selector 6 Screw 7 Support 8 Screw 9 Bracket 10 Relay lever 11 Tie rod adjustable end 12 Adjusting nut 13 Tie rod 14 Cross shaft actuating lever 15 Flat washer 16 Cotterpin 17 Flat washer 18 Cotterpin 19 Bush 20 Gear selector screw

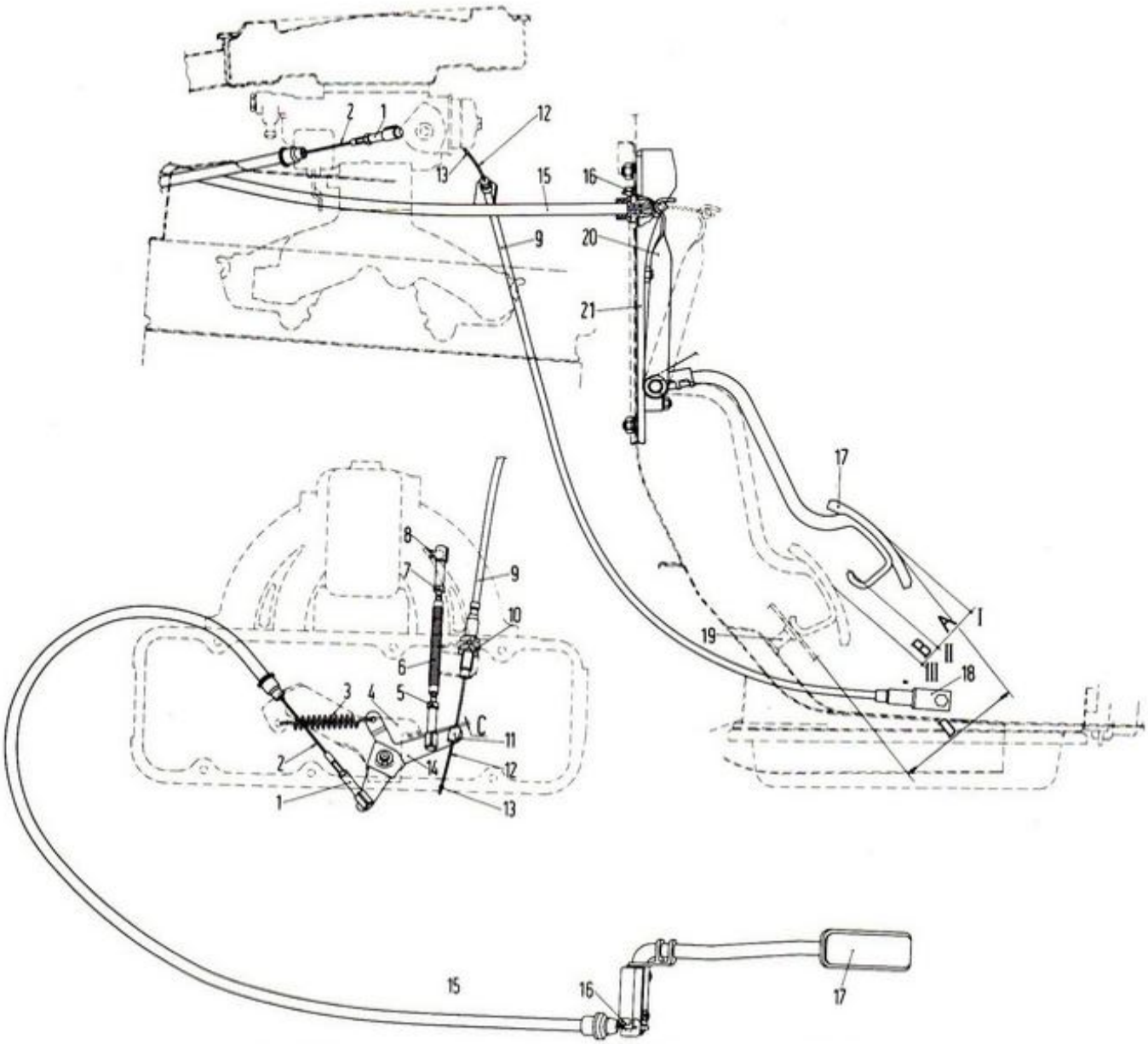

FIG 7:4 Accelerator pedal and downshift valve control linkage

Key to Figs 7:4 and 7:5 1 Adjustable connector 2 Accelerator cable 3 Return spring 4 Support bracket 5 Lefthand side adjustable link 6 Telescopic rod 7 Righthand side adjustable link 8 Ballpin on throttle lever 9 Kick-down outer cable 10 Adjusting nuts 11 Pin 12 Kickdown inner cable 13 Cable terminal end 14 Accelerator lever 15 Accelerator outer cable 16 Cable terminal end 17 Accelerator pedal 18 Kick-down valve link 19 Pedal stop 20 Pedal lever 21 Pedal bracket

Check the selector lever 3 for correct positioning in gear selector gate 5. To do this, lift catch 2 and move the selector to position 1. When the catch is released with the selector lever in position 1, the selector lever should not move at all. If necessary, readjust rod 13 to achieve this condition.

Accelerator linkage adjustment:

This adjustment is necessary to ensure that the transmission makes upward and downward changes at the correct points according to accelerator pedal travel. For the purposes of obtaining the correct adjustment of this control the travel of the accelerator pedal may be considered as divided into two parts. These are designated **A** and **B** as shown in **FIG 7:4**. Part **A** is from the pedal at rest position I to full throttle II, part **B** is from full throttle to the pedal stop 19 in position III. This latter part of the travel is accomplished by means of a telescoping link which overcomes the action of a built-in spring.

Adjustment of accelerator cable and telescoping link is carried out first, then travel **B** (kick-down travel) is adjusted, followed by adjustment of travel **A** (accelerator travel). Refer to **FIGS 7:4** and **7:5** when making adjustments.

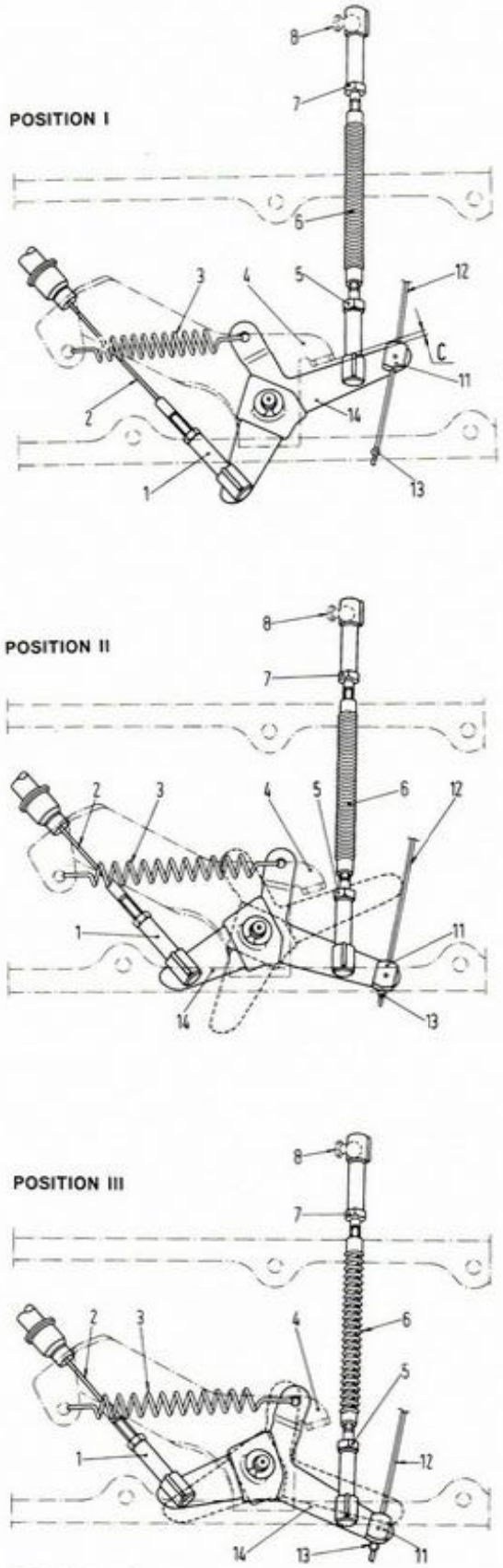

FIG 7:5 The three accelerator linkage checking positions. For key see Fig 7:4

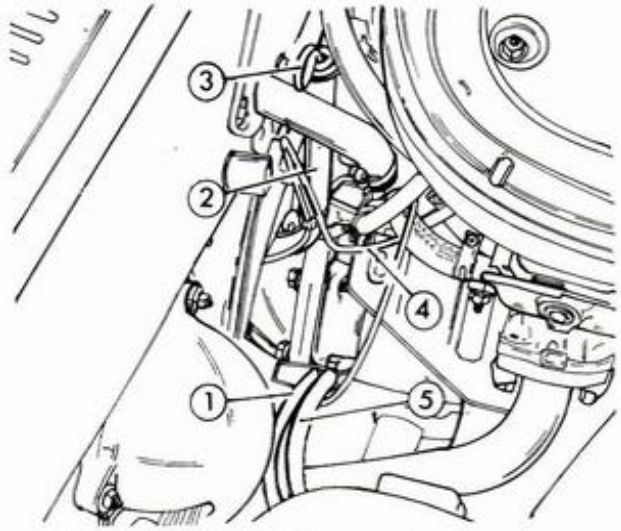

FIG 7:6 Filler, fluid hoses and vacuum line

Key to Fig 7:6 1 Fluid return hose 2 Fluid filler tube 3 Dipstick 4 Vacuum pipe 5 Fluid delivery hose

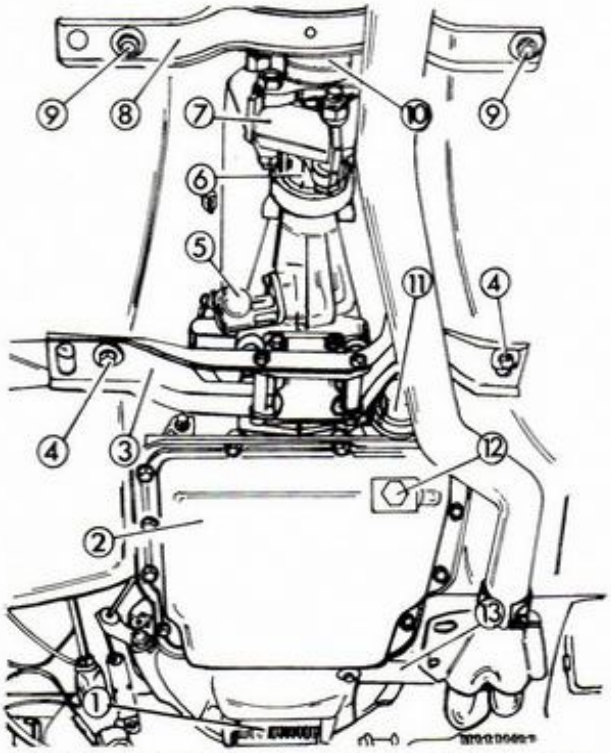

FIG 7:7 Transmission assembly, viewed from beneath

Key to Fig 7:7 1 Drive plate 2 Sump 3 Retention bracket 4 Fixing bolts 5 Speedometer drive support 6 Sliding joint 7 Flexible joint 8 Safety bracket 9 Fixing bolts 10 Propeller shaft 11 Vacuum modulator 12 Drain plug 13 Exhaust pipe support bracket

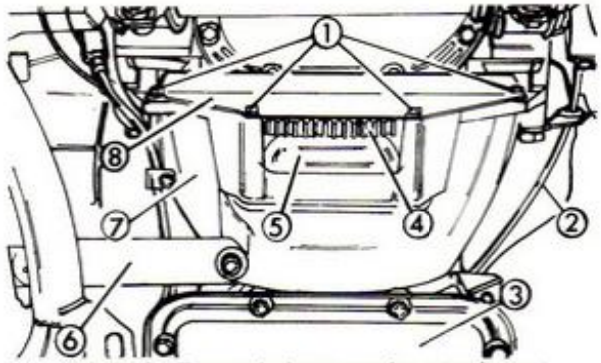

FIG 7:8 Transmission to engine attachment

Key to Fig 7:8 1 Drive plate cover bolts 2 Speedometer cable 3 Sump 4 Drive plate 5 Torque converter 6 Exhaust pipe support bracket 7 Gearbox housing 8 Flywheel cover

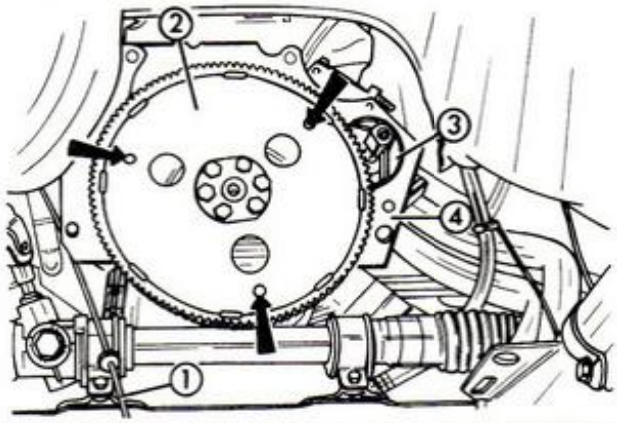

FIG 7:9 Torque converter to drive plate attachment points (arrowed)

Key to Fig 7:9 1 Speedometer cable 2 Drive plate 3 Starter motor 4 Upper flywheel cover

Cable and link adjustment:

The engine and transmission must be at normal operating temperature. An accurate tachometer, connected in accordance with the manufacturer's instructions, will be needed to accurately set engine idle speed. Start the engine and allow it to idle with the selector lever in position **P**, then refer to **Chapter 2** and adjust the idle to 800 ± 50rev/min. Fully engage the handbrake and select **D**, and check that the engine does not stall at idle speed. Correct if necessary by raising the idle speed a fraction, but keep within the speed range specified. When correct, select **P** and switch off the engine.

Remove the adjustable connector 1 of accelerator control rod from transmission lever 14. Check that there is a gap of 1 to 3mm (distance **C**) between lever 14 and support bracket 4. If not, adjust the length of telescopic link 6 until the correct gap is achieved. Make sure that both ends of the link (5 and 7) are uniformly adjusted to avoid one end from pulling out when link 6 is fully stretched in the kick-down position.

Offer adjustable connector 1 on to ball pin of transmission lever 14. This should slip into place without excessive movement of transmission lever 14. If not, adjust cable connector as necessary to achieve the correct condition.

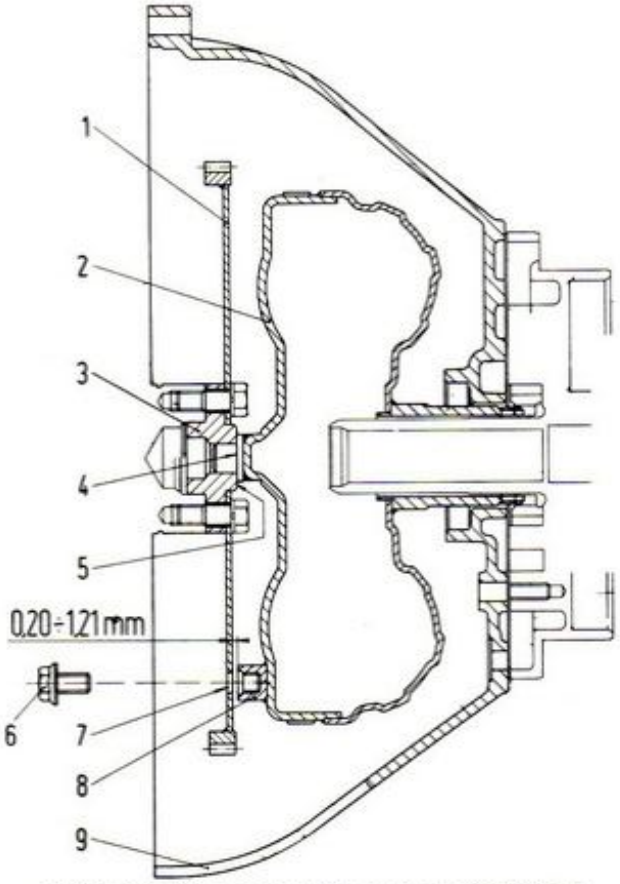

FIG 7:10 Checking torque converter installation

Key to Fig 7:10 1 Drive plate 2 Torque converter 3 Drive plate attachment flange 4, 5 Contact surfaces between converter and drive plate 6 Converter to drive plate screw 7 Attachment point of converter to drive plate 8 Attachment boss 9 Front transmission housing

Travel B:

Remove connector 7 of telescopic link 6 from ballpin on throttle lever 8. Press accelerator pedal 17 until stop pin 11 for kick-down control cable 12 is against cable terminal end 13 (position II), without causing any strain on cable 12. Depress the accelerator pedal further from position II to position III, which is travel **B**. This should lengthen cable 12 by 7 to 9mm, this corresponding to the kick-down valve travel. If this extra cable length is not obtained, loosen locknut 10 and turn upper end of cable sheath 9 until correct engagement of the kick-down valve is obtained. While carrying out this adjustment, take care not to excessively stretch the inner cable 12 which passes through outer sheath 9.

Travel A:

Remove end 7 of telescopic link 6 from ballpin on throttle lever 8. Bring terminal end 13 of kick-down valve control cable 12 into contact with stop pin 11 on accelerator lever 14, without stretching cable 12. Move throttle lever 8 into the fully open position. In this position, the end 7 of telescopic link 6 actuating the accelerator should push on to the ballpin of throttle lever 8 without movement of the lever. If not, adjust the length of the telescopic link to obtain the correct conditions.

7:4 Transmission removal and refitting

Remove the drain plug from beneath the transmission and allow the fluid to drain into a suitable container. Disconnect the battery negative terminal. Remove the kick-down control cable clamp.

Refer to **FIGS 7:6, 7:7, 7:8** and **7:9**. Remove the oil filler tube and dipstick, then disconnect the oil delivery and return hoses from the radiator. Disconnect and remove the vacuum line from carburetter and modulator.

Remove the drive plate cover and front exhaust pipe support bracket. Remove cross shaft control lever safety clip and unhook the longitudinal rod. Detach the speedometer drive gear support and sheath and the front propeller shaft protection bracket. Mark the propeller shaft and gearbox output shaft flanges for refitting in their original relative positions, then detach the propeller shaft from the transmission. Remove the transmission rear mounting attachment screws.

Working through the drive plate cover opening, remove the three screws securing converter to drive plate, rotating for access to each screw. Refer to **Chapter 12** and remove the starter motor. Remove the kick-down cable sheath attachment bracket, then unhook the cable. Remove the oil return line support bracket from the radiator. Remove the upper drive plate attachment screw.

Place a suitable jack beneath the car to support the transmission, then remove the screws securing the transmission front housing to the engine and slide out the transmission and converter assembly. Keep the rear end of the transmission tilted downwards during removal to prevent the torque converter from falling out. Hold the sliding joint at the rear of the transmission to prevent it slipping from the output shaft.

Refitting:

This is a reversal of the removal procedure, noting the following points. As the converter is balanced by the manufacturers it can be installed to the drive plate in any position.

When the transmission housing has been attached to the engine crankcase, refer to **FIG 7:10** and push the converter 2 against the attachment flange 3. In this position, use a feeler gauge to check that a gap of 0.008 to 0.048in (0.20 to 1.21mm) exists between each one of the converter attachment bosses 8 and the corresponding attachment point 7. If the measured clearance is beyond these limits, it will be necessary to renew the engine drive plate.

On completion, check the selector and accelerator linkage adjustments as described in **Section 7:3**. Refill the transmission with fluid as described in **Section 7:2**.

CHAPTER 8

PROPELLER SHAFT, REAR AXLE AND REAR SUSPENSION

8:1 Description
8:2 Routine maintenance
8:3 Propeller shaft
8:4 Rear axle
8:5 Rear suspension
8:6 Fault diagnosis

8:1 Description

Drive is transmitted from the gearbox to the rear axle by a split propeller shaft which has a flexible coupling at the front. An intermediate, rubber insulated, ballbearing supports the shaft centre and there are two universal joints at the rear. The hypoid axle unit has semi-floating halfshafts, supported by ballbearings at the rear hubs. There are various axle ratios to suit the different engines and transmissions.

Rear suspension is by means of coil springs and telescopic hydraulic dampers. The rear axle is positively located by means of four rubber-bushed trailing arms, two of which are mounted diagonally, and a transverse rod.

The items of maintenance and overhaul which can be carried out by a reasonably competent owner/mechanic are given in this chapter, but it is not advised that any further operations be attempted. Special tools and equipment are essential to overhaul the halfshafts and differential components and set the necessary preloads so, for these reasons, the components mentioned should be dismantled and serviced only by a Fiat agent having the necessary equipment and trained personnel.

8:2 Routine maintenance

The axle oil should be checked at 10,000km (6000 mile) or 6 monthly intervals and changed at 30,000km (18,000 mile) or 18 month intervals. At these intervals also check the condition and security of the propeller shaft. The sliding joint nipple should be greased at 20,000km (12,000 mile) or 12 monthly intervals.

Checking axle oil level:

With the car standing on level ground and the axle cold, wipe dirt from around the filler plug at the rear of the differential unit and remove the plug. The oil level is correct if it reaches to the lower edge of the filler hole. If the level is low, top up with SAE.90EP oil. Allow the surplus to drain away fully before refitting the filler plug. At the same time inspect the breather on top of the casing to check that it is clean and clear.

Changing axle oil:

Draining will be easier if it is carried out after a run when the oil is hot. Remove the drain plug from beneath the differential and allow all old oil to drain into a suitable container. Refit and tighten the drain plug, then remove the filler plug and slowly fill the axle to the correct level

FIG 8:1 Using special tool to remove flexible joint

Key to Fig 8:1 1 Front propeller shaft 2 Flexible coupling 3 Special tool 4 Insulator

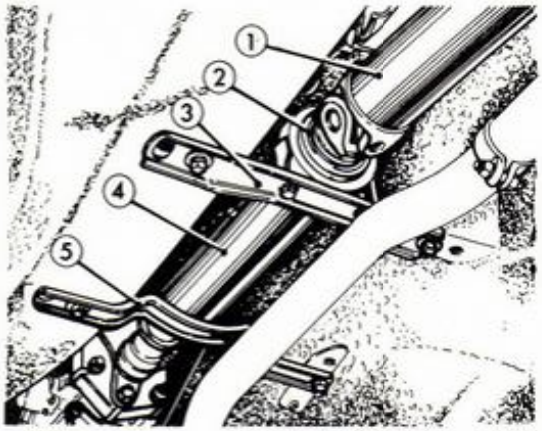

FIG 8:2 Disconnecting propeller shaft centre bearing assembly

Key to Fig 8:2 1 Rear propeller shaft 2 Centre bearing assembly 3 Crossmember 4 Front propeller shaft 5 Safety bracket

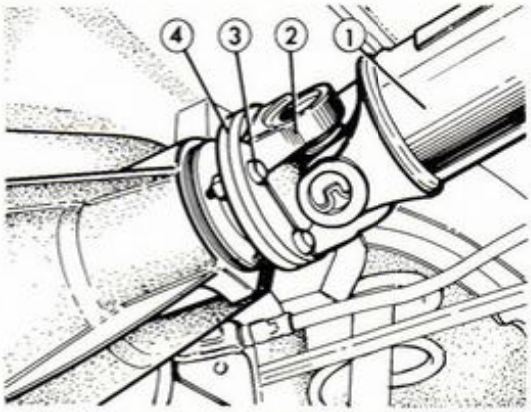

FIG 8:3 Rear propeller shaft to differential flange attachment

Key to Fig 8:3 1 Rear propeller shaft 2 Yoke 3 Nut and bolt 4 Pinion flange

with new oil as described previously. Lubricate the front propeller shaft sliding joint with lithium-base grease, applying the grease gun at the nipple provided.

8:3 Propeller shaft

Removal:

The propeller shaft flexible rubber coupling is shown in **FIG 8:1**. Mark with paint the appropriate lugs of the drive flanges to ensure correct refitting, then fit tool A.70025 around the couplings as shown in the illustration and tighten the clamp on the tool. Remove the nuts and bolts which secure the coupling to the transmission drive flange. The special tool must be used to compress the coupling otherwise it will be found practically impossible to remove the bolts. New couplings may be supplied with a steel strap around them and this should be left in place until the coupling is installed, as it takes the place of the special tool. Do not forget to remove the tool or strap after installation.

Remove the bolts and washers that secure the safety bracket 5 and central support 2 (see **FIG 8:2**). Paint alignment marks across the flanges of the rear propeller shaft universal joint flange and the differential pinion flange so that they can be correctly realigned when refitting. Remove the nuts and bolts securing universal joint flange to pinion flange (see **FIG 8:3**). Remove the propeller shaft assembly from beneath the car.

Servicing:

Propeller shaft components are shown in **FIG 8:4**. When the propeller shaft has been removed, check the condition of the condition of the centring ring and the seal behind it on the gearbox output shaft. If worn or damaged they can be pulled off after removal of the retaining circlip.

Front coupling and sliding joint:

If the flexible coupling shows any sign of damage or perishing it should be renewed. The sliding coupling should slide freely along the shaft but there should be no rotational play. If rotational play is detected, new parts must be fitted.

Universal joints:

Repair kits for servicing universal joints are available and if the joint is worn or defective all the parts supplied in the kit should be used. Do not renew individual parts of the joint. To check play between spider journals and needle bearings, clamp the propeller shaft 2 in a vice having padded jaws (see **FIG 8:5**). Mount a suitable dial gauge assembly 1 as shown, then move the yoke up and down to check free play. This should be between 0.01 and 0.04mm (0.0004 and 0.0015in). If the higher figure is exceeded, play can be brought to within limits by the fitting of thicker circlips 3, provided that the bearing assemblies are otherwise in good condition. Circlips are supplied in the following thicknesses: 1.50, 1.53, 1.56, 1.59, 1.62 and 1.65mm (0.0591, 0.0602, 0.0614, 0.0626, 0.0637 and 0.0649in). Each circlip must be the same thickness as its counterpart on the opposite side of the joint to maintain the joint in a central position, so always

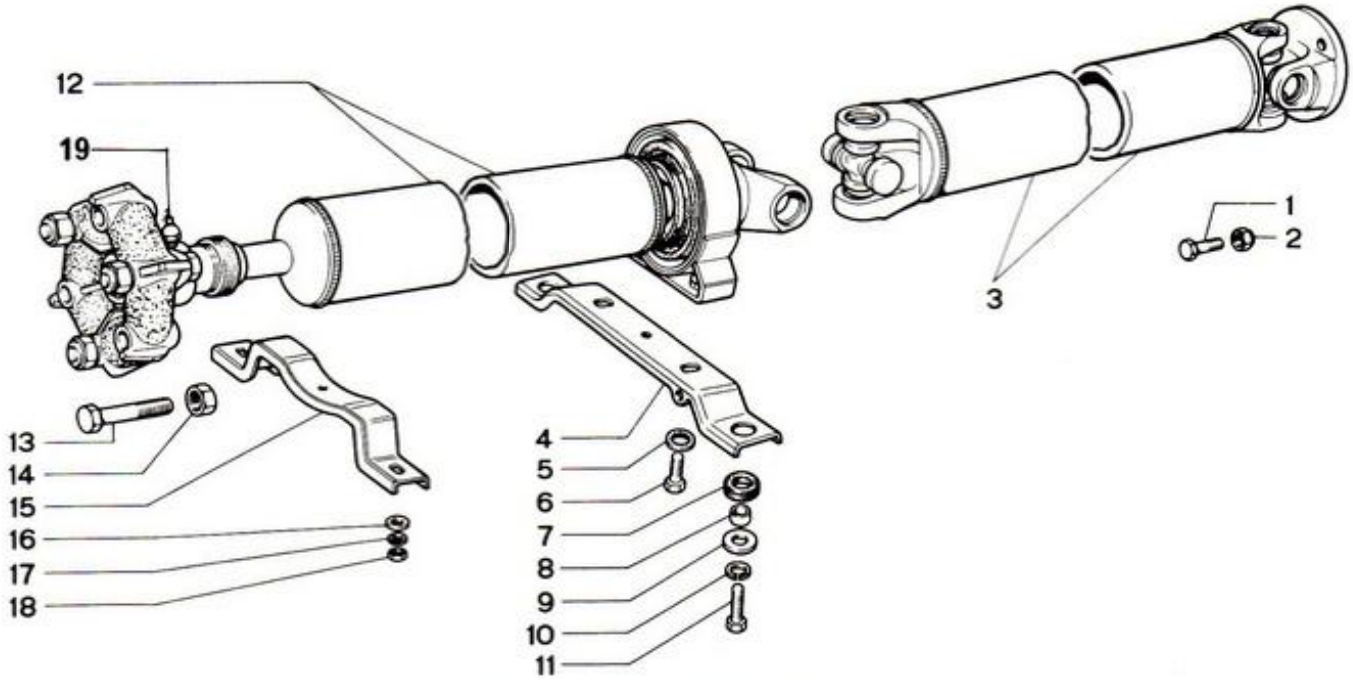

FIG 8:4 Propeller shaft components

Key to Fig 8:4 1, 2 Screw and nut 3 Rear propeller shaft 4 Crossmember 5 Lockwasher 6 Screw 7 Insulator 8 Spacer 9 Flat washer 10 Lockwasher 11 Screw 12 Front propeller shaft 13, 14 Screw and nut 15 Safety bracket 16 Flat washer 17 Lockwasher 18 Nut 19 Grease nipple

renew circlips in matched pairs. If any part of the universal joint assembly is worn or damaged, renew in the following manner:

Refer to **FIG 8:6**. Remove all four circlips that secure the bearing cups from the joint to be dismantled. If difficulty is found in removing the circlips, clean the area and bore thoroughly to remove dirt and corrosion then lightly tap the bearing cup inwards to relieve pressure on the circlip.

Lay the yoke arms on two blocks of wood so that the arms only are supported. Tap gently downwards on the other portion of the shaft so that the spider, being supported on the arms, forces the upper bearing out of the upper arm. When the bearing cup has been driven out sufficiently, grip it with the fingers or pliers and pull it completely out. Turn the shaft over and remove the opposite bearing cup in a similar manner. The shaft can then be turned through 90° so that the other pair of arms is supported and the remaining pair of bearing cups removed in a similar manner. Manoeuvre the spider from the arms.

If the bores in the arms are worn oval then the shaft parts must be renewed. Check that the bearing cups are a light dry fit in the bores.

Check that the seals on the spider arms are securely in place and undamaged. If the seals are damaged, they should be renewed. Lightly smear the bottom of the seal with jointing compound and drive it firmly back into position with a suitable hollow drift.

Each bearing cup must be filled with needle rollers held in place by grease. The correct number of needle rollers precisely fills the cup, leaving no gaps or surplus needles.

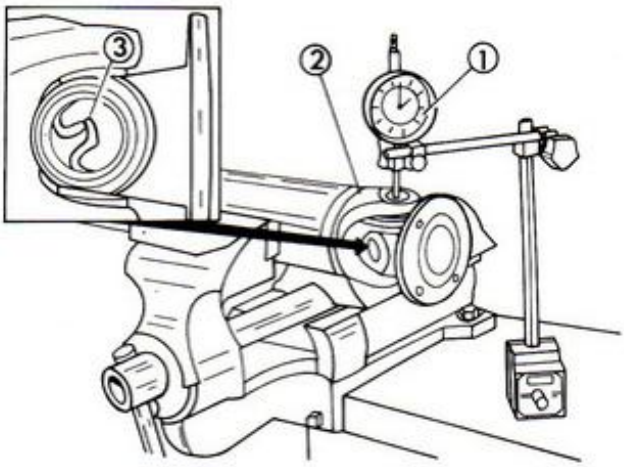

FIG 8:5 Checking universal joint play

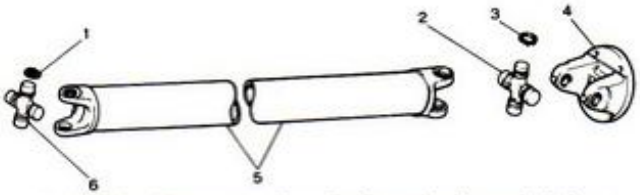

FIG 8:6 Rear propeller shaft and universal joints

Key to Fig 8:6 1 Circlip 2 Spider and bearings 3 Circlip 4 Yoke 5 Rear propeller shaft 6 Spider and bearings

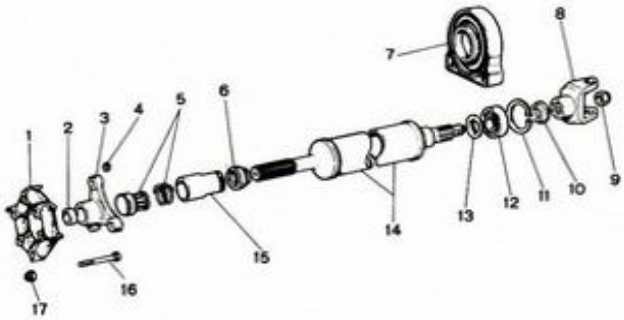

FIG 8:7 Front propeller shaft and centre bearing

Key to Fig 8:7 1 Flexible coupling 2 Centralising bush 3 Splined sleeve 4 Grease nipple 5 Split sleeve and spring 6 Seal 7 Centre bearing assembly 8 Yoke 9 Nut 10 Protective plate 11 Circlip 12 Centre bearing 13 Protective plate 14 Front propeller shaft 15 Sleeve 16, 17 Bolt and nut

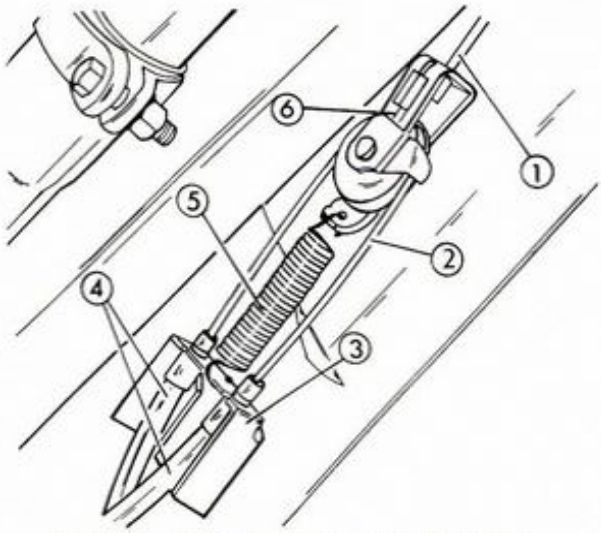

FIG 8:8 Disconnecting handbrake cables

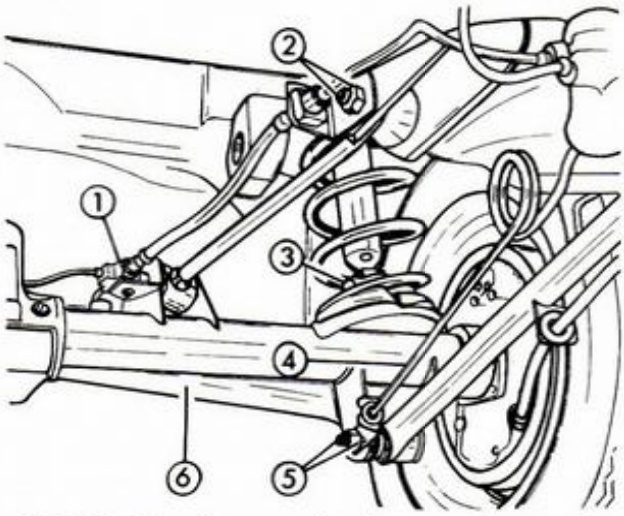

FIG 8:9 Detachment points for rear axle removal

Fit the spider into place and carefully press one cup back into position, between the padded jaws of a vice. Take great care that the spider enters the bearing cup correctly, without displacing any needle rollers, and that the recesses in the spider are well packed with grease. Install the opposite bearing cup in a similar manner. The vice will only press the cups back in flush with the arms. Use either a mandrel of a diameter just smaller than the bearing cups as a spacer between cup and vice jaw, or use a soft-nosed drift of the correct diameter to drive the cups back into place. Secure the cups with circlips of the correct thickness, as described previously. Make sure that the circlips are fully and squarely seated in the grooves.

Install the remaining pair of bearing cups in a similar manner. When all four bearing cups are in place, make sure that the joint moves freely without binding. If the joint is stiff, tap on the arms of the yokes so that the bearing cups free and move back against the circlips.

Centre bearing:

Remove the crossmember from the rubber mounting assembly. Check that the rubber mounting for the bearing is in good condition and that the rubber is neither splitting or perishing. The bearing itself must rotate freely without noise or binding. If the parts are defective, dismantle the universal joint as described previously to detach the rear propeller shaft from the yoke at the bearing. Refer to **FIG 8:7** and unscrew nut 9, then pull yoke 8 from the shaft 14. It is essential to mark the shaft and yoke so that they can be reassembled in their original relative positions to preserve the balance of the assembly. Pull the centre bearing assembly 7 from the propeller shaft. Remove circlip 11 and press bearing 12 from the mounting.

Reassemble the parts in the reverse order of removal after renewing defective components.

8:4 Rear axle

Removal:

Chock the front wheels firmly against rotation and slacken the rear wheel bolts. Raise the rear of the car and support safely on floor stands placed beneath body members. Fully release the handbrake and remove the rear road wheels. Drain the oil from the differential unit as described in **Section 8:2**.

Refer to **FIG 8:8**. Disconnect handbrake cable 1 from pulley bracket 6, release spring 5 and detach handbrake inner cable 2 and outer covers 4 from support bracket 3. Disconnect the propeller shaft from the rear axle pinion shaft flange as described in **Section 8:3**. Refer to **Chapter 11** and disconnect the brakes pipes from the rear wheel cylinders. Plug the pipes to prevent loss of fluid and entry of dirt.

Refer to **FIG 8:9**. Detach brake pipe union 1 from the rear axle and place the pipe assembly to one side to prevent damage. Disconnect brake compensator torsion bar 4 from its locating bracket. Raise a suitable jack under the axle to support the axle assembly. Remove the nuts and bolts 2 and 5 securing the control arms and remove the nut and bolt 3 securing the lower end of the damper. On Station Wagon models, damper installation differs as shown in **FIG 8:10**. Remove bolt 2 to detach from

bracket 3. Remove the nut and bolt securing transverse rod 6 to the axle. Carefully lower the axle and remove the assembly from beneath the car.

Refitting:

The axle is installed in the reverse order of removal. Tighten suspension component fixings as described in **Section 8:5**. On completion, bleed the braking system and check the handbrake adjustment as described in **Chapter 11**.

Axle shafts:

To remove, first jack up the car and secure on axle stands. Remove the respective wheel and brake drum. Through the holes in the shaft outer flange remove the four bolts securing the shaft bearing retaining plate. Use a slide hammer, if available, to remove the shaft. Alternatively, refit the wheel and carefully strike it from behind. Clean off any oil leakage.

The ballbearing and retaining collar are pressed in to the shaft with special equipment. Take the shaft to your local dealer to have the bearing and collar renewed. Before refitting the shaft, renew the inner oil seal and outer 'O' ring in the axle flange.

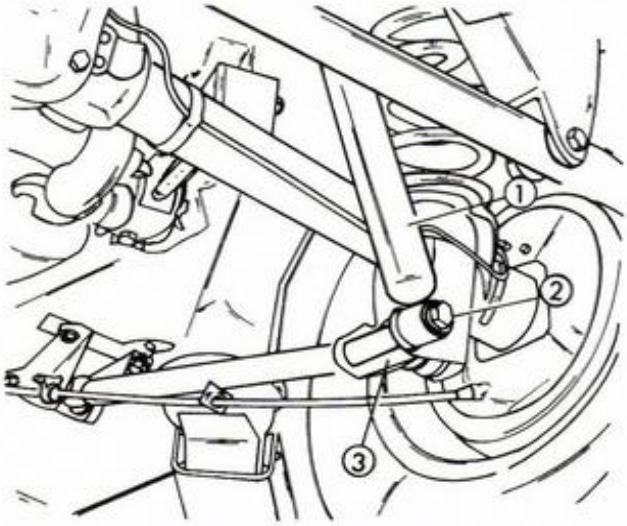

FIG 8:10 Damper installation, Station Wagon models

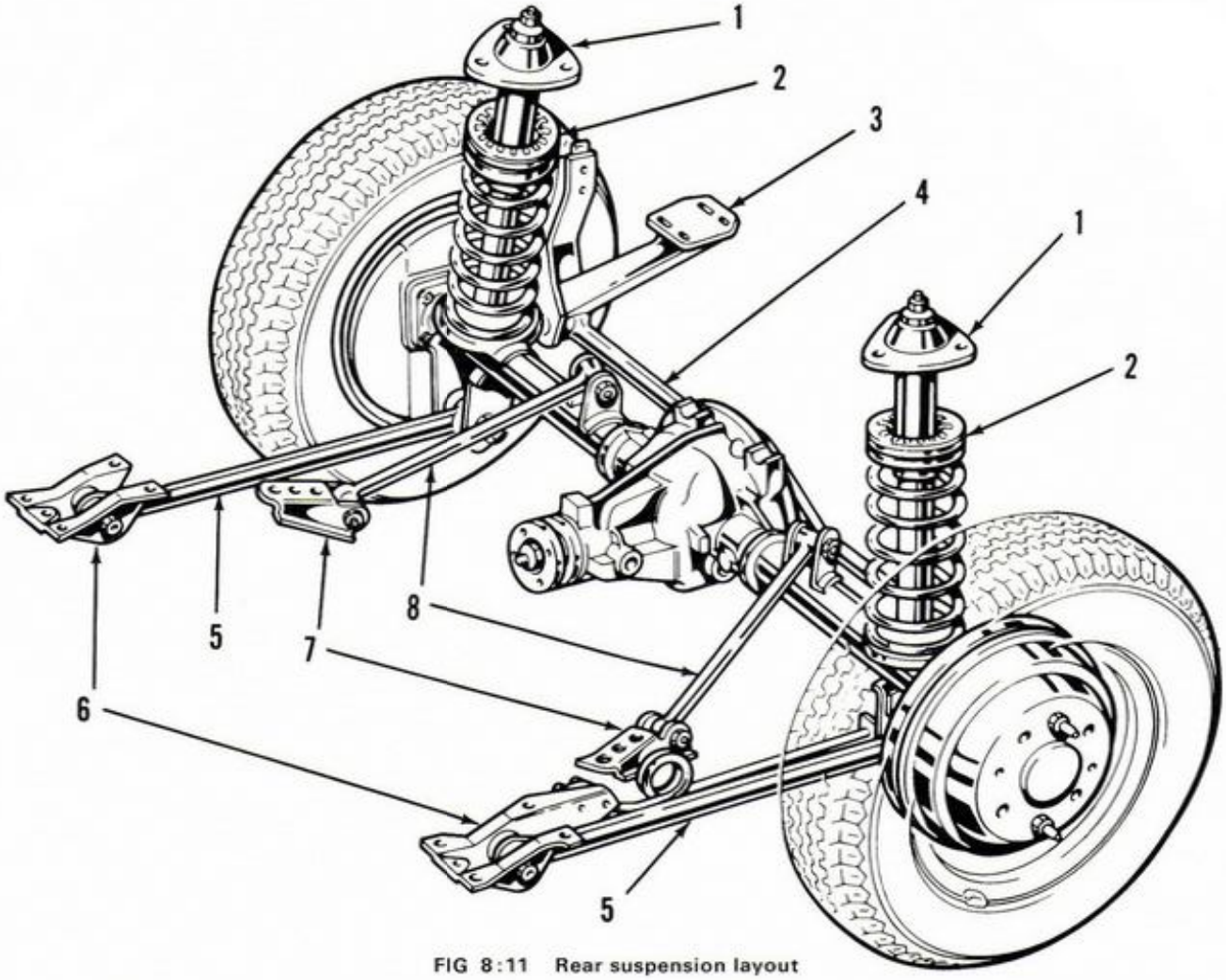

FIG 8:11 Rear suspension layout

Key to Fig 8:11 1 Damper 2 Coil spring 3 Transverse rod support 4 Transverse rod 5 Lower control arm 6, 7 Support brackets 8 Upper control arms

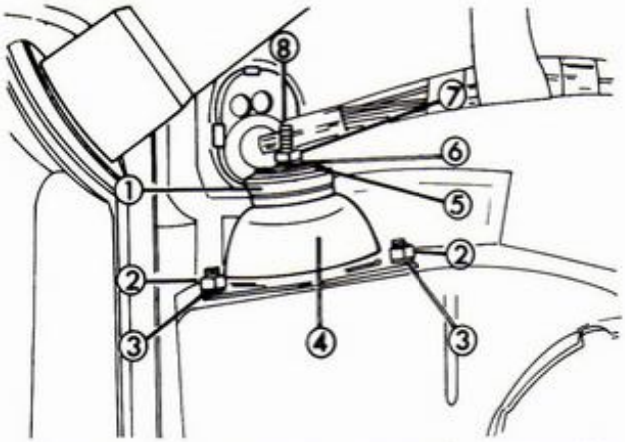

FIG 8:12 Damper upper mounting, Saloon models

Disconnect the brake three-way connector and carefully plug to prevent fluid loss. Release the brake regulator torsion bar from the axle (see **FIG 8 : 9**). Detach the upper axle control arms and the transverse rod from their body mounting brackets (see **FIG 8 : 11**). Remove the lower damper mounting nuts and bolts (see **FIG 8 : 9**), then lower the axle until the coil springs are free. Remove the upper damper mounting inside the boot (see **FIG 8 : 12**) and withdraw the damper from below.

To refit, reverse the removal procedure but do not fully tighten the axle and damper mountings until the weight of the car is on the axle. Finally, bleed the brakes as described in **Chapter 11**.

To remove and refit the dampers on Estate car models is straightforward as they are separate from the coil springs. Refer to **Section 8 : 5** and **FIG 8 : 10**.

8:5 Rear suspension

The layout of the rear suspension components is shown in **FIG 8:11**. Note that Station Wagon models do not have dampers 1 installed through the coil springs 2 as shown. Instead, the dampers are mounted as shown in **FIG 8:10**. On these models, the dampers 1 are simply removed by detaching nut, bolt and washers 2 securing the lower end to bracket 3, then removing the bolt and washer securing the upper end to the body. All other suspension components are similar to those fitted on Saloon models and are removed as described next.

Suspension removal:

Remove the rear axle assembly as described in **Section 8:4**, then lower the assembly sufficiently on the jack to allow removal of the coil springs from their lower seats on the axle housing. On Station Wagon models, the damper is removed as described previously.

On Saloon models, use a suitable spanner to hold the squared end of damper rod 8 (see **FIG 8:12**), then remove nut 7 with lockwasher 6. Remove three nuts 2 and lockwashers 3. Remove upper spacer 5, rubber bush 1 and support 4. If necessary, remove the upper and lower control arms from the car body.

Refitting:

Refitting is a reversal of the removal operation. Note that the control arm and transverse rod attachments should be installed loosely at first. When all other work is completed, lower the car so that the weight rests on the road wheels to properly compress the suspension, then fully tighten control arm and transverse rod fixings to the specified torque figures.

Dampers:

To remove the dampers on Saloon car models, raise the car and support the body on suitable stands and blocks. Support the axle with a trolley jack and remove the rear wheels.

8:6 Fault diagnosis

(a) Noisy axle

1 Incorrect or insufficient lubricant
2 Worn bearings
3 Worn gears
4 Damaged or broken gear teeth
5 Incorrect adjustments in differential
6 General wear

(b) Excessive backlash

1 Worn gears or bearings
2 Worn drive shaft splines
3 Worn universal joints
4 Defective flexible coupling
5 Loose wheel attachments

(c) Oil leaks

1 Defective oil seals
2 Defective gasket or distorted casing
3 Blocked breather
4 Overfilled rear axle

(d) Vibration

1 Propeller shaft out of balance
2 Defective centre bearing or flexible coupling
3 Worn universal joints

(e) Rattles

1 Worn universal joints
2 Worn suspension rubber bushings
3 Loose or worn damper mountings

(f) Knock

1 Check (a)
2 Badly worn splines on drive shafts
3 Worn universal joints

CHAPTER 9

FRONT SUSPENSION AND HUBS

9:1 Description
9:2 Routine maintenance
9:3 The front hubs
9:4 Anti-roll bar
9:5 Control arms and ball joints
9:6 Suspension struts and steering knuckles
9:7 The crossmember
9:8 Front wheel alignment
9:9 Fault diagnosis

9:1 Description

The independent front wheel suspension is by means of helically coiled springs controlled by double-acting hydraulic telescopic dampers. The suspension strut assemblies also act as upper pivots for the steering knuckle assemblies to accommodate steering movement. The lower ends of the steering knuckle assemblies are located laterally by control arms and longitudinally by the outer ends of the anti-roll bar. Ball joints are provided at the control arm to steering knuckle connections to accommodate suspension and steering movement. The wheel hubs rotate on the steering knuckle stub axles and are each carried on two taper roller bearings. A sectioned view of suspension components is shown in **FIG 9:1**.

9:2 Routine maintenance

Regularly check the suspension and steering linkages for faults or defects. Examine the dust covers over ball joints for splits, chafing or other damage. A faulty dust cover will allow road dirt to enter the joint and cause excessive wear. Check for excessive play in the steering linkage and suspension components. Wheel bearings should be checked as described in **Section 9:3**.

At the intervals recommended in the manufacturer's service schedule, the hubs should be removed so that the bearings can be examined, packed with clean fresh grease and adjusted after installation. These operations are dealt with in the next section.

9:3 The front hubs

FIG 9:2 shows the components of the front hub assembly.

Raise and safely support the front of the car so that the road wheels are clear of the ground. Spin the wheels and check that they rotate freely without bearing noise, taking care not to confuse noise from the disc brake pads with that from a defective bearing. Grasp the tyre at the top and bottom of the wheel and attempt to rock the top of the wheel in and out while noting the play. Repeat the test with the tyre gripped at each side of the wheel. If excessive play is evident, the wheel bearing should be adjusted first and, if roughness is still apparent, the bearing should be dismantled for inspection. Note that a new nut 10 will be required every time the wheel bearings are overhauled or adjusted. For this reason, do not lock the new nut after wheel bearing adjustment until the bearings have been checked as just described for roughness in operation, as the nut may have to be removed again so that the bearings can be removed and checked.

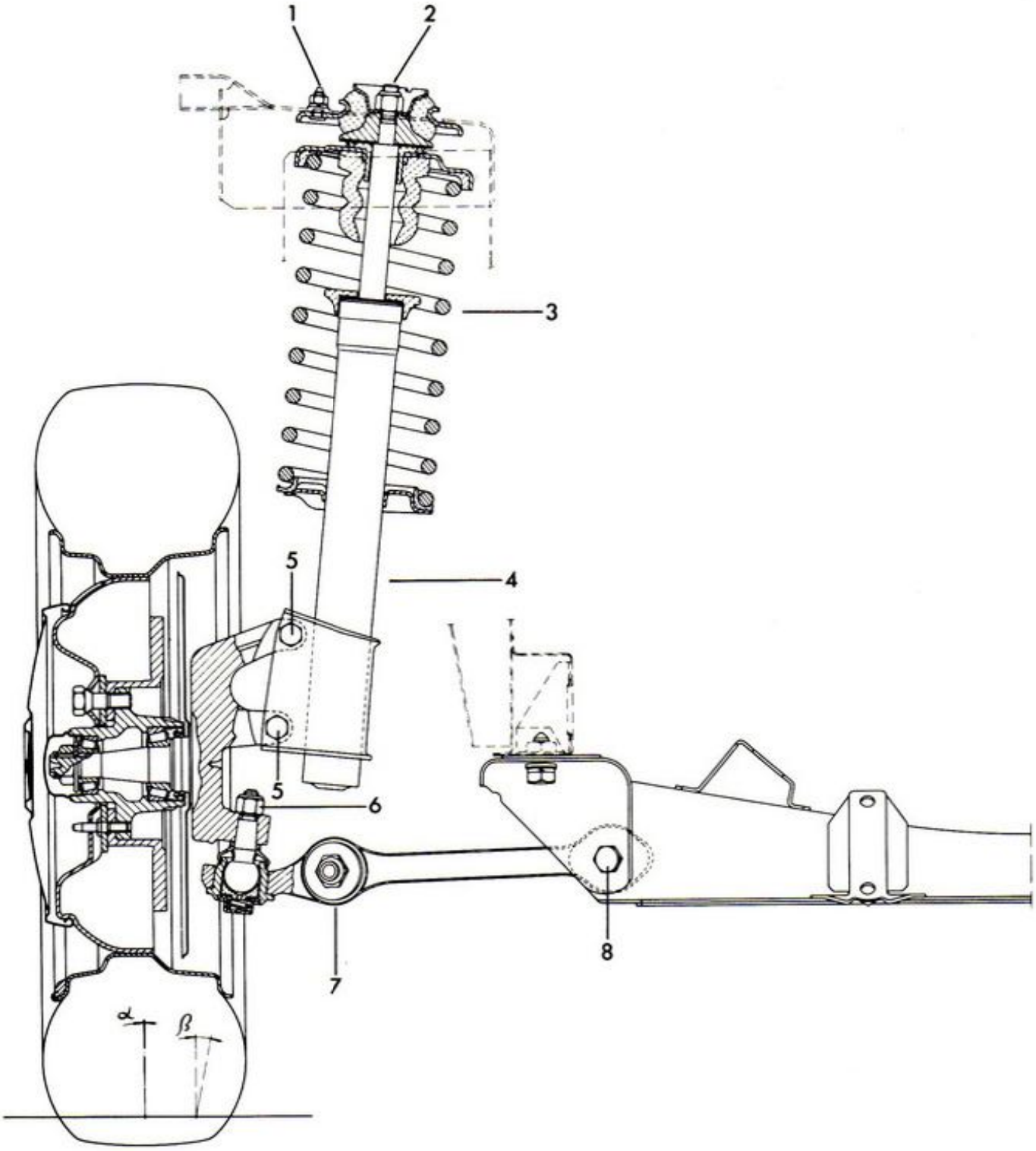

FIG 9:1 Sectioned view of front suspension

Key to Fig 9:1 1 Suspension strut upper mounting nut 2 Damper retaining nut 3 Coil spring 4 Damper unit 5 Lower mounting nuts and bolts 6 Ball joint securing nut 7 Anti-roll bar securing nut 8 Control arm to crossmember nut and bolt

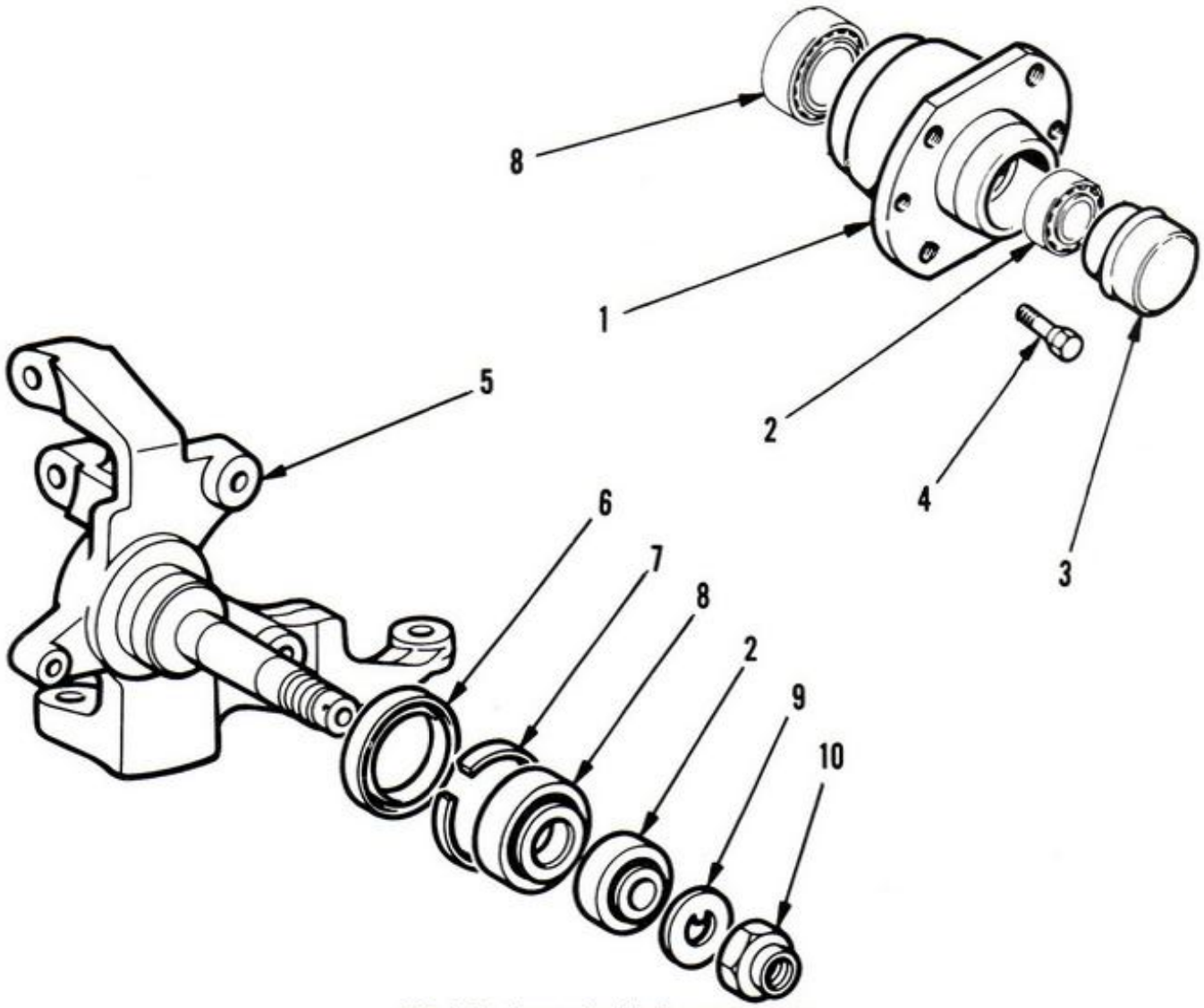

FIG 9:2 Front wheel hub components

Key to Fig 9:2 1 Wheel hub 2 Outer bearing 3 Grease cap 4 Bolt 5 Steering knuckle 6 Seal 7 Retainer 8 Inner bearing 9 Washer 10 Hub nut

Adjustment:

Raise and safely support the front of the car and remove the road wheel. Remove the grease cap 3 from the centre of the hub. Remove and discard hub nut 10 and washer 9. Make sure that new washer 9 is correctly in place, then fit a new hub nut and tighten to a torque of 14.5lb ft (2kgm) while turning the hub in both directions to settle the bearings. Slacken back the nut and tighten it again to a torque of 5lb ft (0.7kgm). Make a mark on the washer at the mid-point of a convenient flat, as shown in **FIG 9:3**. Hold the washer and slacken back the nut until the corner of the nut is opposite the reference mark as shown in the illustration. Lock the nut by staking the edge of the collar down into the groove of the stub axle with a suitable drift.

Removal:

Slacken the wheel bolts, raise and safely support the front of the car then remove the road wheels. Without disconnecting the brake hose, remove the brake caliper from the steering knuckle (see **Chapter 11**) and wire the caliper to the suspension to avoid straining the hose.

Remove the two bolts securing the brake disc to the hub, then remove the disc and plate. Note the position of disc on hub so that they can be refitted in their original relative positions to preserve the balance of the assembly.

Remove the grease cap shown at 3 in **FIG 9:2**, then remove and discard hub nut 10 and washer 9. Use a suitable puller to remove the hub assembly 1 from the stub axle on steering knuckle 5, collecting the inner race of the outer bearing 2 as it comes free. Remove and discard oil seal 6 and remove the retainer 7 and the inner race from inner bearing 8.

Cleaning and examination:

Wipe the old grease from the hub and bearings, then thoroughly degrease the parts in petrol or other approved solvent. Wash the bearing races separately by rotating

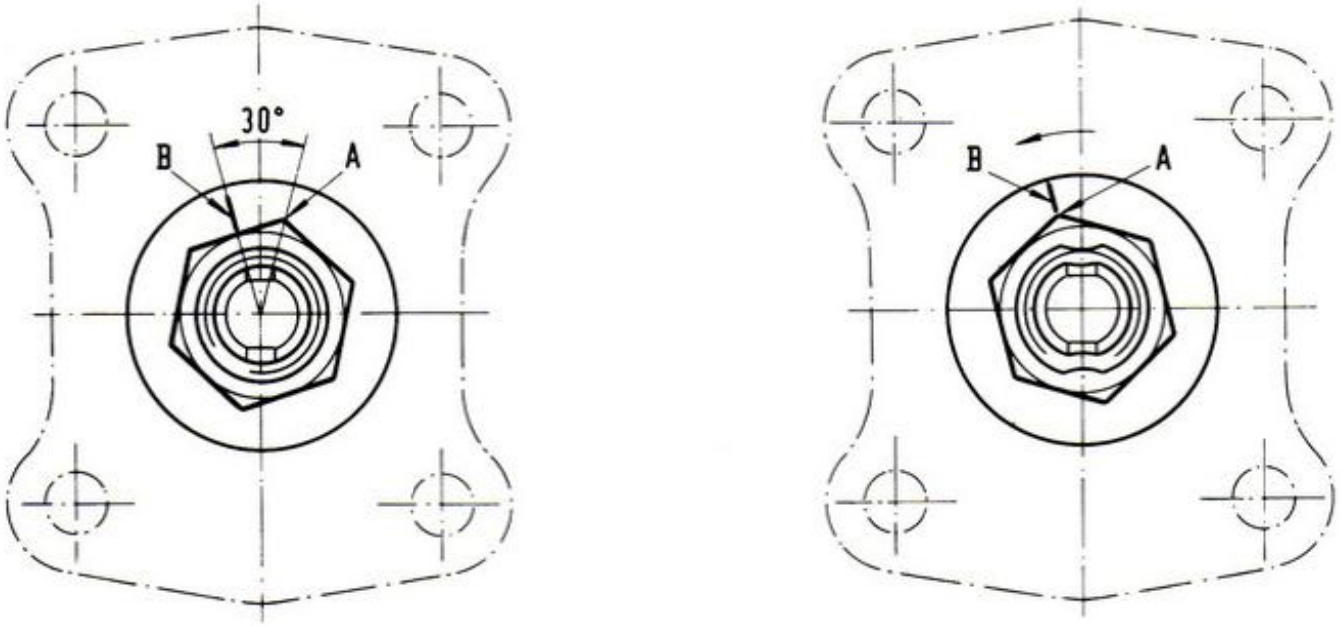

FIG 9:3 Front hub bearing adjustment

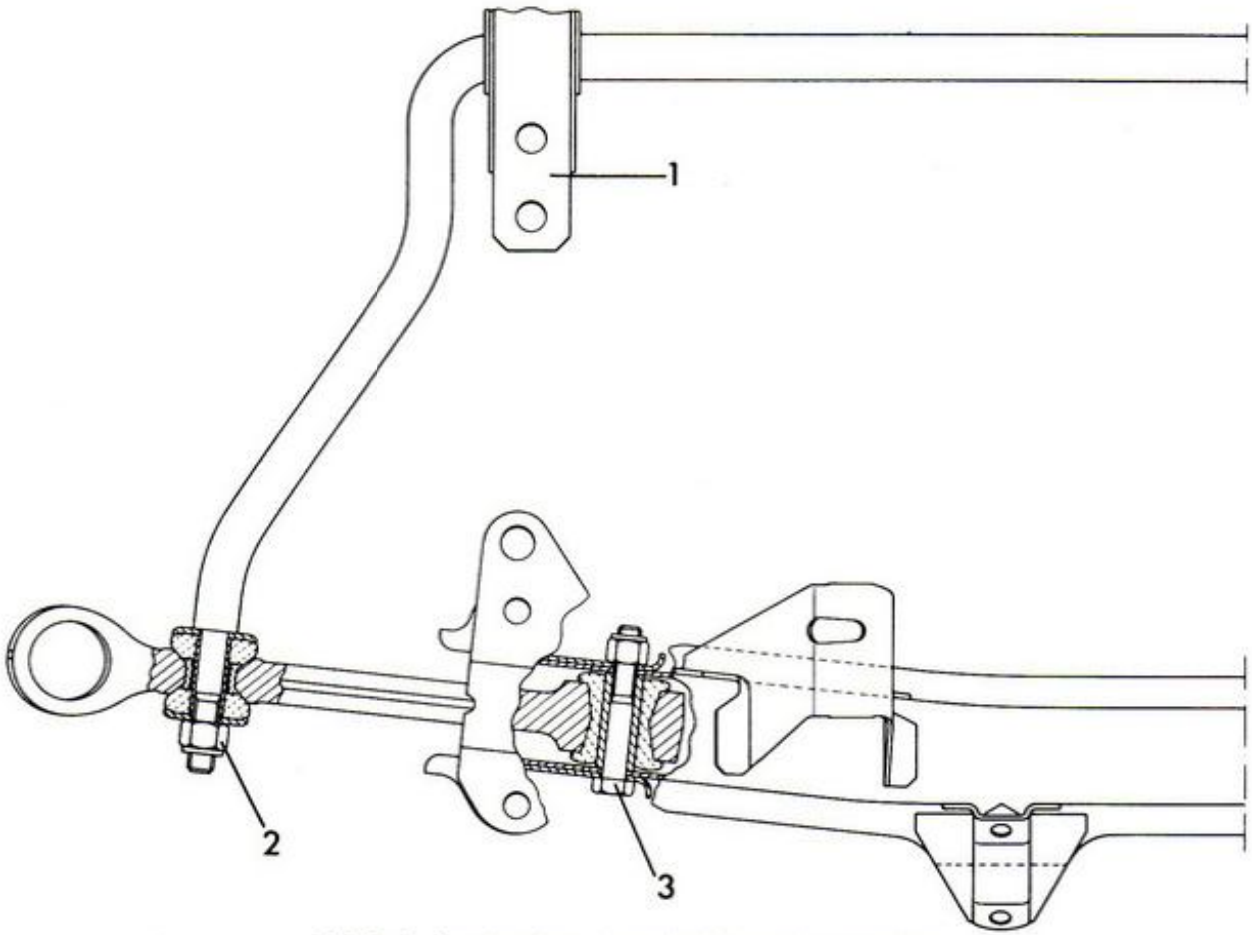

FIG 9:4 Section through anti-roll bar and control arm

them in a bowl of clean solvent. The brake disc must be thoroughly washed with solvent to remove all traces of grease or dirt. Allow the parts to dry thoroughly.

Examine the operating face of the stub axle on which the oil seal operates for scoring or nicks. Light damage can be smoothed with fine grade emerycloth. Check the stub axle for hairline cracks or other damage.

Check the outer races of the bearings for fretting, scoring or wear. If damage is found, both outer races must be driven out with a suitable copper drift, working evenly round the races to prevent jamming, then both bearings renewed complete.

Lubricate the inner races with light oil. Press each inner race firmly back into its outer and rotate the bearing to check for any roughness in operation. Dirt can be a cause of roughness, so wash the bearing again thoroughly before repeating the test. If an air-line is used to dry the bearings, do not allow them to spin in the air blast as this chips the faces. If a bearing is defective in any way, both bearings must be completely renewed, including the outer races in the hub.

Reassembly:

If the outer races of the hubs have been removed, install by driving back evenly and fully using a suitable drift.

The wheel bearings must be lubricated with lithium-base grease. Evenly pack the inside of the hub with fresh grease and liberally pack the inner race of the inner bearing with grease, working it well into the rollers. Install the inner race of the inner bearing into the hub and press the retainer and a new oil seal into the hub to retain the race in position.

Slide the hub assembly back on to the stub axle, taking care not to damage the grease seal. Pack the inner race of the outer bearing with grease and fit it back into place, followed by the new washer and new nut. Adjust the wheel bearings as described previously and install the grease cap, filling the cap with 0.9oz (25g) of grease. Refit the brake disc, taking care not to contaminate the surface with grease or dirt. Refit the brake caliper. As the hose was not disconnected there is no need to bleed the brakes. Pump the brake pedal hard several times to correctly adjust the disc brake. Refit the road wheel and lower the car to the ground.

9:4 Anti-roll bar

Removal:

Refer to **FIG 9:4**. Remove the bolts securing anti-roll bar brackets 1 on each side of the car, then remove nuts 2 to release the outer ends of the anti-roll bar from the control arms on each side. Pull the anti-roll bar from the control arm, noting the shim washers fitted to the mounting points so that they can be refitted in their original positions to preserve front wheel alignment (see **Section 9:8**).

Refitting:

This is a reversal of the removal procedure. Make sure that the shim(s) removed on each side are refitted in their original positions. On completion, it is recommended that front wheel alignment be checked as described in **Section 9:8**.

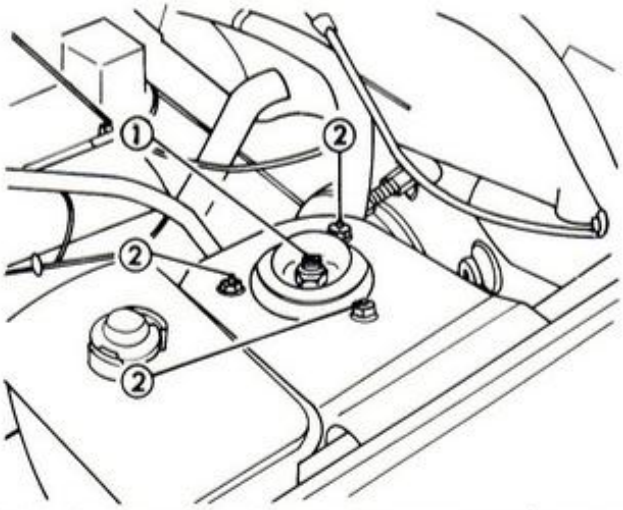

FIG 9:5 Damper 1 and suspension strut mounting nuts 2

9:5 Control arms and ball joints

Removal:

Slacken the front wheel bolts, then raise the front of the car and support safely on floor stands placed beneath the front crossmember. Remove the road wheel.

Refer to **FIG 9:1** and remove ball joint securing nut 6. Use a suitable puller tool to release the ball joint from the steering knuckle. Remove nut 7 and the rubber bush from the outer end of the anti-roll bar. Pull the control arm and ball joint assembly rearwards to detach from the anti-roll bar. Remove nut and bolt 8 and detach the control arm assembly from the crossmember.

FIG 9:4 shows a section through the control arm and rubber bushes. If a control arm bush is worn or damaged, it must be renewed at a service station, using special tools and press equipment. If the ball joint assembly or its rubber dust cover is worn or damaged, the complete control arm assembly must be renewed.

Refitting:

This is a reversal of the removal procedure. Make sure that any shims fitted to the anti-roll bar are installed in their original positions, as described in **Section 9:4**. The ball joint securing nut must be tightened to 25lb ft (3.5kgm). Install the control arm inner fixing bolt and nut shown at 8 in **FIG 9:1** loosely at first. When all other work is completed, lower the car so that it rests on the road wheels and load with four persons, then finally tighten the inner fixing bolt and nut to the specified torque.

9:6 Suspension struts and steering knuckles

Suspension strut removal:

Slacken the wheel bolts, then raise and safely support the front of the car on floor stands placed beneath the front crossmember. Remove the road wheel. Raise a jack beneath the outer end of the control arm to support the weight of the wheel hub and steering knuckle assembly.

Open the bonnet and remove the three suspension strut upper mounting nuts shown at 2 in **FIG 9:5**.

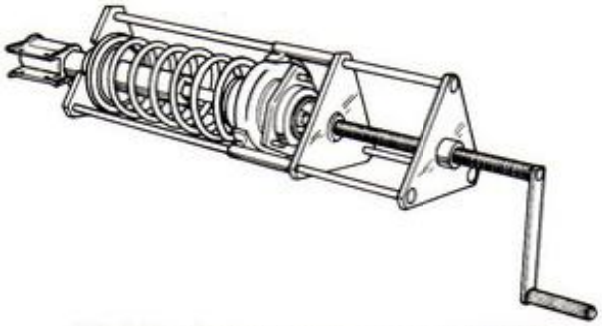

FIG 9:6 Spring compressor tool A.74277

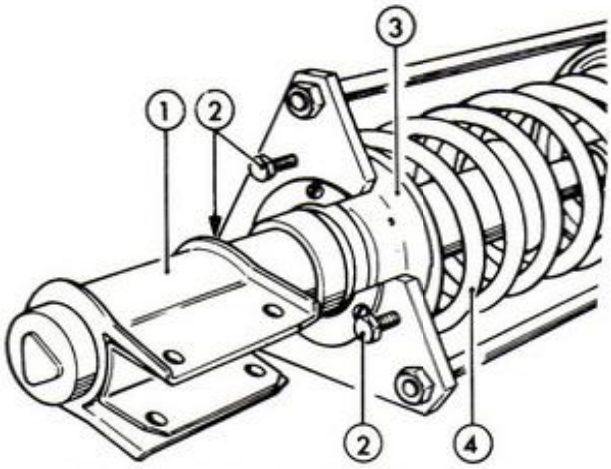

FIG 9:7 Spring compressor installation

Key to Fig 9:7 1 Damper unit 2 Spring retainer clearance screws 3 Spring retainer 4 Coil spring

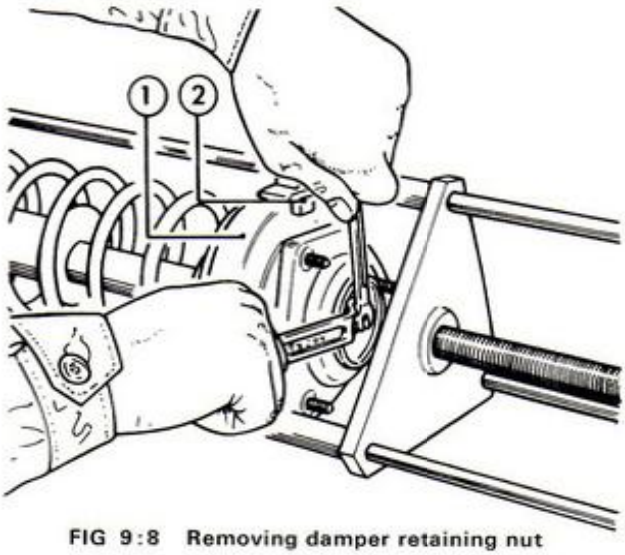

FIG 9:8 Removing damper retaining nut

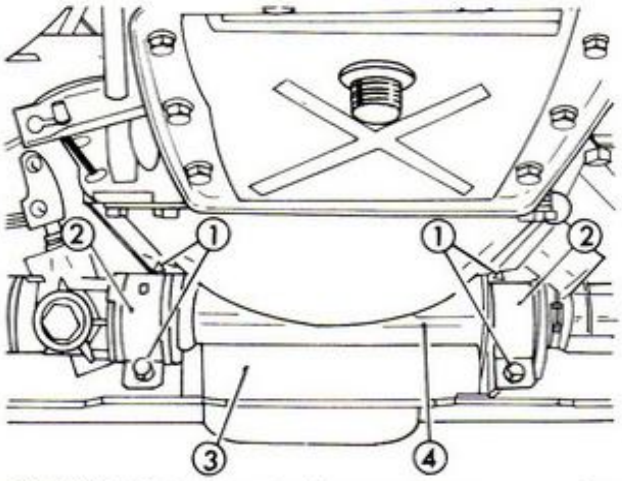

FIG 9:9 Detaching steering gear from crossmember

Do not slacken the central nut securing damper 1. Lower the jack until the suspension strut studs are clear of the holes in the upper mounting.

Refer to **FIG 9:1** and remove the two suspension strut lower mounting nuts and bolts shown at 5. Separate the strut from the steering knuckle and remove the assembly from the car. Support the steering knuckle and hub assembly so that the brake caliper hose and the ball joint assemblies are not strained.

Coil spring removal:

In order to remove the coil spring from the suspension strut assembly, it is essential to use a spring compressor tool such as A.74277 as shown in **FIG 9:6**. Make sure that the tool is correctly installed as shown in **FIG 9:7**. Make sure that screws 2 are touching retainer 3. One screw at each end must be in the recess in retainer 3.

Tighten the special tool to compress the spring, then remove the retaining nut from the damper rod as shown in **FIG 9:8**. Hold the squared end of the rod with one spanner while slackening the nut with a second spanner. Remove the nut to release retainer 1, then release the special tool and remove the coil spring.

Refitting is a reversal of the removal procedure, making sure that the spring is correctly seated at both ends before compressing with the special tool.

Refitting:

Refit the suspension strut assembly to the car in the reverse order of removal. Fit and tighten the lower mounting nuts and bolts first, then raise the assembly with a jack under the steering knuckle until the studs can be fitted through the mounting holes and the upper mounting nuts fitted and tightened.

Steering knuckle removal:

Slacken the wheel bolts, then raise the front of the car and support safely on floor stands placed beneath the front crossmember. Remove the road wheel.

Without disconnecting the flexible hose, remove the brake caliper from the steering knuckle (see **Chapter 11**). Support the brake caliper by wiring to the suspension so that the hose is not strained. If necessary, remove the brake disc and wheel hub components as described in **Section 9:3**.

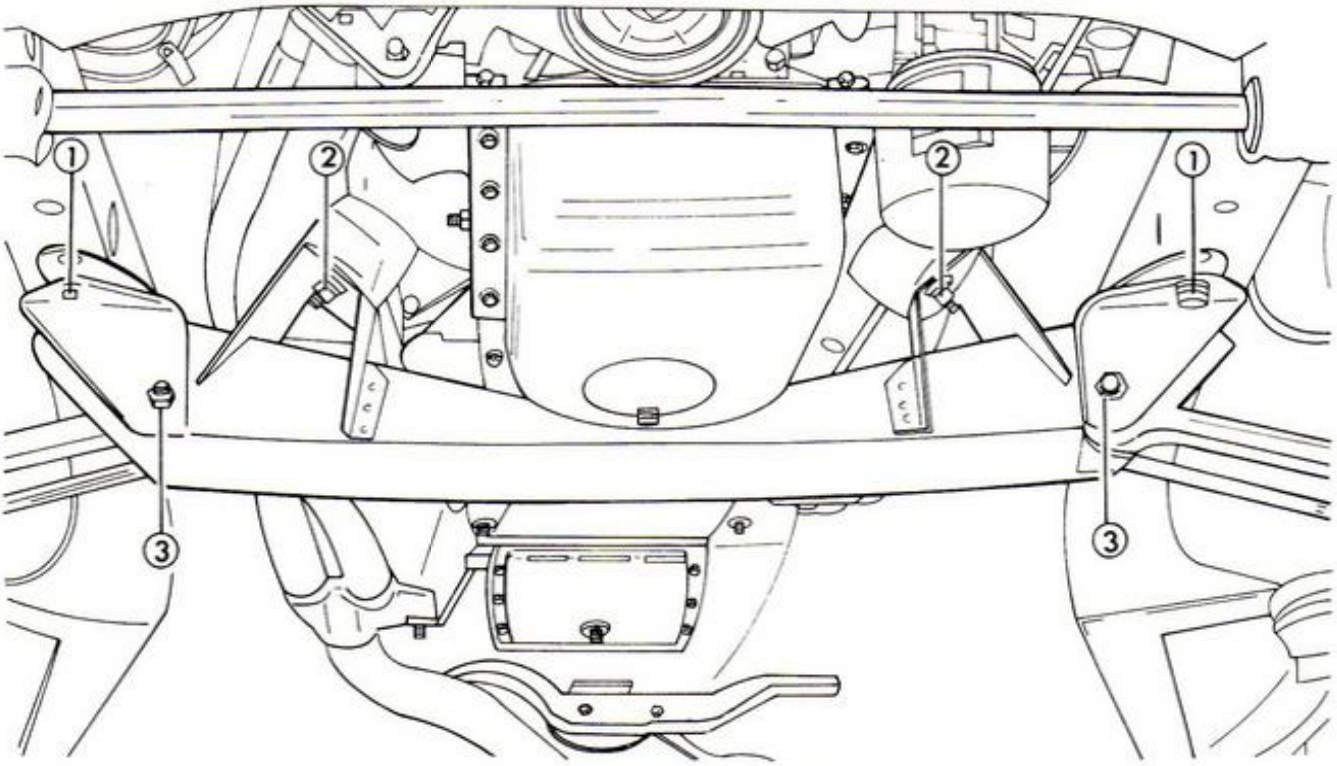

FIG 9:10 Crossmember removal

Remove the control arm ball joint fixing nut 6 shown in **FIG 9:1**. Use a suitable puller to detach the ball joint from the steering knuckle. Carry out a similar operation to remove the steering tie rod ball joint from the steering knuckle. Remove the two mounting nuts and bolts shown at 5 in **FIG 9:1**, then detach the steering knuckle assembly from the suspension strut.

Refitting:

Refitting is a reversal of the removal procedure. Tighten the tie rod and control arm ball joint securing nuts to 25lb ft (3.5kgm).

9:7 The crossmember

Removal:

The front engine mountings are attached to the crossmember so it will be necessary to support the engine with suitable lifting equipment so that the front engine mountings can be freed.

Raise the front of the car and support safely on floor stands placed beneath body members. Fit suitable lifting equipment to the engine and raise slightly to support the weight. Refer to **FIG 9:9** and remove the four bolts 1 securing mountings 2, so that steering gear 4 is released from crossmember 3.

Raise a jack beneath the crossmember to just support its weight. Refer to **FIG 9:10** and remove the two nuts 2 securing crossmember to engine mountings. Remove two nuts 3 and the bolts securing the lower control arms to crossmember. Remove four bolts and washers 1 securing crossmember to body, then lower the jack and remove crossmember from beneath the car.

Refitting:

This is a reversal of the removal procedure. Install bolts and nuts shown at 3 in **FIG 9:10** loosely at first, then complete all other work and lower the car to the ground. With the car resting on the road wheels and loaded with four persons, finally tighten nuts and bolts 3 to the specified torque.

9:8 Front wheel alignment

Due to the need for special optical measuring equipment for accurate results, the checking of front wheel

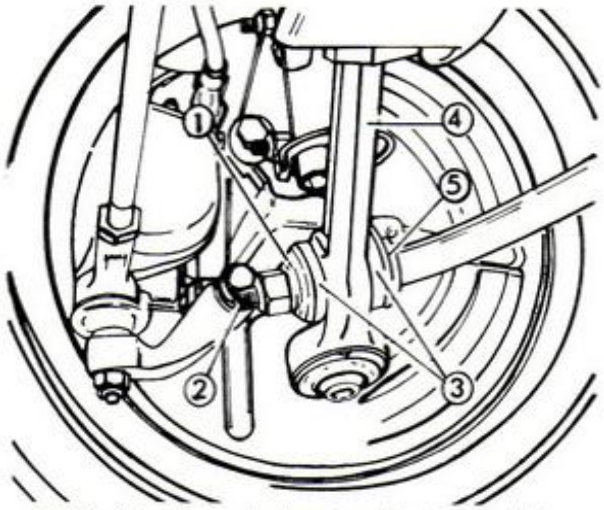

FIG 9:11 Front wheel caster adjustment point

Key to Fig 9:11 1 Dished washer 2 Anti-roll bar 3 Rubber bushes 4 Control arm 5 Shim position

caster and camber angles should be carried out by a service station.

The camber angle is determined by the alignment of front suspension components, so if found to be incorrect a thorough check of suspension components including bushes should be carried out and any faulty parts renewed.

Caster angle is adjusted by modifying shim thickness at the point where the anti-roll bar outer ends are connected to the control arms (see **FIG 9:11**). If caster angle is incorrect, shims must be added or removed from point 5 to correct. The correct caster angle is 4° to 5° with the car laden.

The method for setting the correct toe-in of the front wheels is described in **Chapter 10**.

9:9 Fault diagnosis

(a) Wheel wobble (see also Chapter 10)

1 Worn hub bearings
2 Weak front springs
3 Uneven tyre wear
4 Worn suspension bushes

(b) Car pulls to one side

1 Unequal tyre pressures
2 Incorrect suspension geometry
3 Defective suspension bushes or damaged parts
4 Weak spring on one side
5 Fault in steering system

(c) Bottoming of suspension

1 Defective damper unit
2 Broken or weak front coil spring

(d) Excessive body roll

1 Defective damper
2 Weak coil spring

(e) Rattles

1 Suspension strut mountings loose
2 Damper internally defective
3 Defective suspension bushes

CHAPTER 10

THE STEERING GEAR

10:1 Description
10:2 Tie rod ball joints
10:3 Steering column
10:4 Steering gear
10:5 Front wheel alignment
10:6 Fault diagnosis

10:1 Description

Rack and pinion type steering gear is employed, the rack housing being secured to the front axle crossmember by four bolts. A tie rod is connected to each end of the rack by means of a ball joint enclosed in a concertina-type rubber gaiter. The outer end of each tie rod is threaded into a ball joint attached to the steering arms on the steering knuckle assembly. A universally-jointed coupling is connected to the splined ends of the steering gear pinion shaft and the steering column shaft. The steering wheel is a push-fit on the splined steering shaft and is secured by a nut.

No lubrication points are provided on the steering gear or ball joint assemblies. Maintenance is confined to a regular check of steering gear components. If steering gear rubber gaiters are damaged or perished, they should be renewed without delay as a damaged gaiter can allow loss of oil and the ingress of dirt. If a ball joint is worn or its rubber dust cover is damaged or perished, the ball joint should be renewed.

10:2 Tie rod ball joints

Check the ball joints at the outer end of each steering gear tie rod for free play. To do this, hold the ball joint assembly while an assistant turns the steering wheel gently to and fro to rock the steering gear to left and right. Test for vertical play by pressing upwards on the outer ends of the tie rods. If free play can be detected in either test, or if the ball joint dust cover is damaged or perished, the ball joint in question should be renewed.

Ball joint renewal:

If the front of the car is raised to improve access to the underside, support safely on floor stands placed beneath the front crossmember. Refer to **FIG 10:1**. To prevent ball joint housing damage while slackening the locknut 4, hold the ball joint housing by means of a spanner fitted on the flats provided.

Remove ball joint securing nut 1, then use a suitable puller to remove the ball joint from steering knuckle 2. Unscrew the ball joint assembly from tie rod 3, carefully counting the number of turns taken to do so.

Screw the new ball joint on to the tie rod by the same number of turns as counted during removal. Ensure that the mating tapers are clean and free from grease, then fit the ball stud to the steering arm and tighten the nut to 25lb ft (3.5kgm). Hold the ball joint by means of a spanner on the flats provided and tighten the locknut. On completion, check and if necessary adjust the front wheel alignment as described in **Section 10:5**.

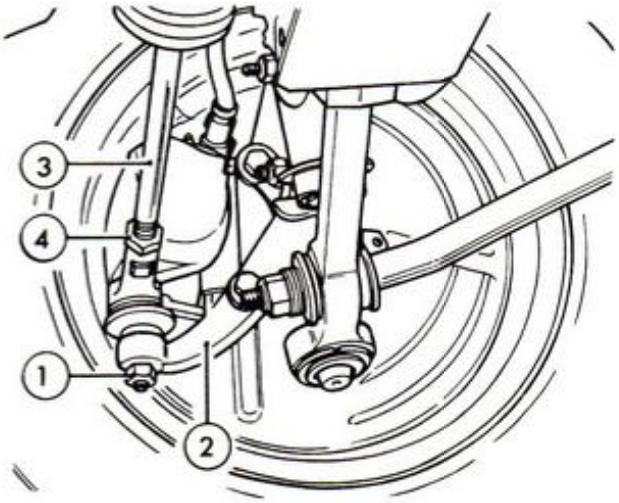

FIG 10:1 Tie rod ball joint removal

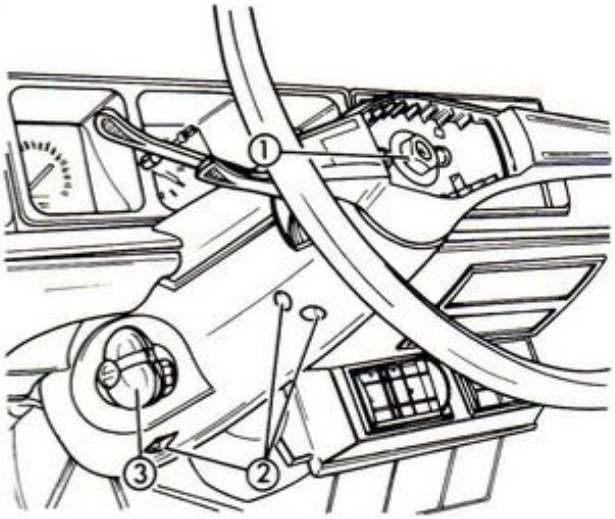

FIG 10:2 Removing steering wheel and column covers

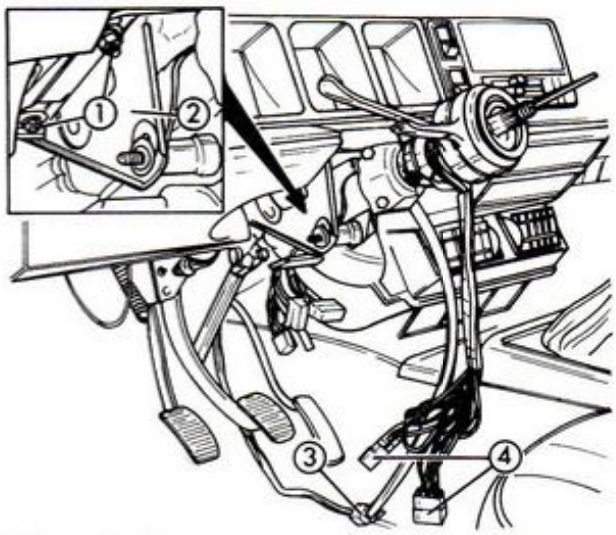

FIG 10:3 Column mountings and wiring connectors

10:3 Steering column

The removal and refitting instructions given in this section are for the type of steering column assembly which is adjustable for rake, as installed on 1800 models and 1300 and 1600 Special models. Apart from the rake adjustment facility, the steering column fitted to other models in the range is similar in design and installation.

Removal:

Remove the horn cover by carefully levering it from the centre of the steering wheel. Refer to **FIG 10:2**. Remove the four screws 2 securing the steering column cover halves. Remove the column rake adjustment knob 3, then remove the covers from the steering column. Remove nut 1 and pull the steering wheel from the column shaft.

Refer to **FIG 10:3** and disconnect the wiring connectors 3 and 4. Remove the four nuts 1 securing upper steering column support 2.

Raise the front of the car and safely support on floor stands placed beneath the front crossmember. Refer to **FIG 10:4**, and mark the relationship of the universal joint clamp to the steering gear pinion shaft so that these parts can be reassembled in their original relative positions. Remove clamp bolt and nut 1 securing universal joint 2 to steering gear 3. Carefully slide the steering column upwards to release the joint from the splined pinion shaft, then remove the column assembly from the passenger compartment.

Check the universal joints at the lower end of the steering column for wear or damage. If any joint is faulty, the assembly should be renewed. Check the steering column shaft for excessive play in the upper and lower bushes. If the bushes are worn, the shaft must be removed from the column and the bushes extracted. New bushes must be pressed into place and retained by staking. The column bushes should be lightly lubricated before installing the column assembly in the car.

Refitting:

Slide the universal joint over the pinion shaft, indexing the alignment marks made previously. Fit and tighten the clamp bolt and nut. Position the upper column housing on the dash panel, then secure the column with the four nuts. Install the steering wheel, making sure that the spokes are horizontal with the front wheels in the straightahead positions. Tighten the steering wheel retaining nut to 36lb ft (5kgm). Reconnect the wiring connections and refit the steering column cover, rake adjustment knob and horn cover.

10:4 Steering gear

Removal:

Remove securing nut 1 (see **FIG 10:1**) from the ball joint on each side of the car, then use a suitable puller to detach the ball joints from the steering knuckles 2. Refer to **FIG 10:4** and remove nut and bolt 1 securing universal joint 2 to the steering gear pinion shaft. Remove the four bolts 5 securing mountings 4 to crossmember 6, then remove the steering gear assembly from the car.

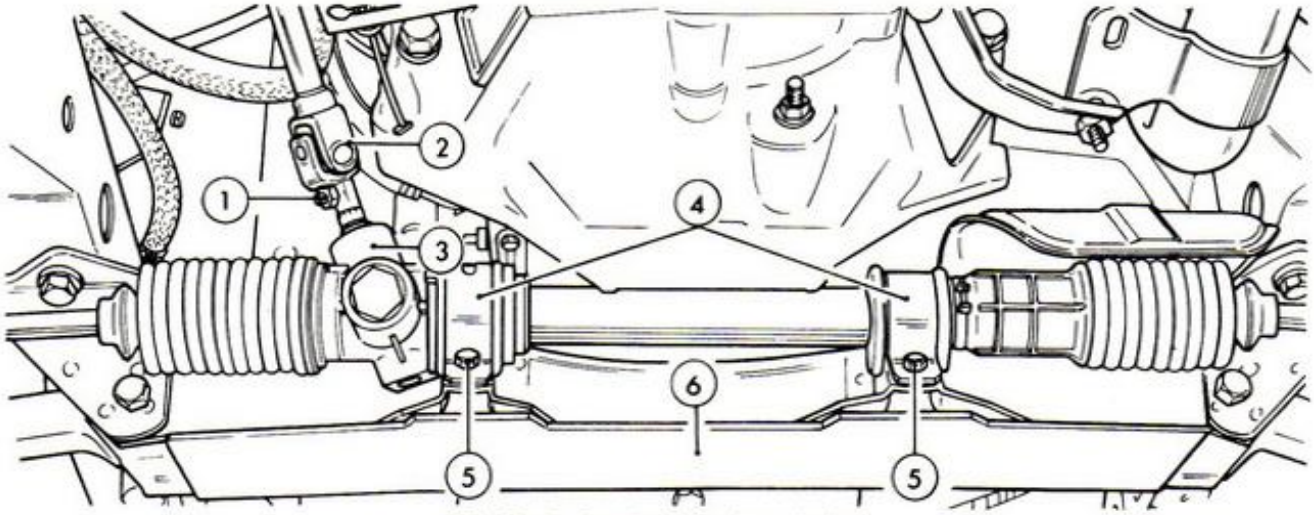

FIG 10:4 Steering gear installation

Key to Fig 10:4 1 Clamp bolt and nut 2 Universal joint 3 Steering gear housing 4 Mounting brackets 5 Bolts 6 Crossmember

Dismantling:

Hold the steering gear assembly vertically so that the oil drains into the rack housing. Release the clamps securing the upper rubber gaiter to tie rod and steering gear housing, then slide the gaiter upwards on to the steering rod. Now turn the assembly over and allow the oil to drain into a waste container. Release the clamps and slide the opposite gaiter on to the tie rod.

Clamp the steering rack 3 in a vice with padded jaws as shown in **FIG 10:5**. Unscrew ball joint 2 to release tie rod 1 with ball joint from rack 3. Do not remove the ball joint on the other end of the rack unless renewal is necessary, as ball joints are staked to the rack and must be renewed if damaged during removal.

Refer to **FIG 10:6**. Remove the threaded plug then remove centring bush 2 complete with spring 1. Slide rack 4 from the housing, turning pinion 3 as necessary.

Refer to **FIG 10:7**. Remove the nut holding pinion shaft in steering gear housing, then remove pinion shaft 1 and plastic bearing half 2. Inspect the remaining plastic bearing half in the housing for wear or damage and remove if necessary. **FIG 10:8** shows the pinion shaft assembly. Inspect the pinion shaft roller bearing in the housing for wear or damage and remove if necessary. On steering boxes with a hole provided, use a suitable puller to remove the roller bearing. If a hole is not provided, tool A.74362 (1 in **FIG 10:9**) must be used to remove the bearing from housing 2.

Inspect all other components for wear or damage. Check the steering rack for scoring on the bearing surfaces and for worn or damaged teeth. Check the pinion shaft for worn or damaged splines and for damaged gear teeth. If the pinion bearing shown at 2 in **FIG 10:8** is to be renewed, release it by removing circlip 3. Check rubber gaiters and renew if necessary.

Reassembly:

If the pinion shaft roller bearing was removed, install by carefully driving into place. Enter the rack 3 into the housing (see **FIG 10:7**). Install lower plastic bearing,

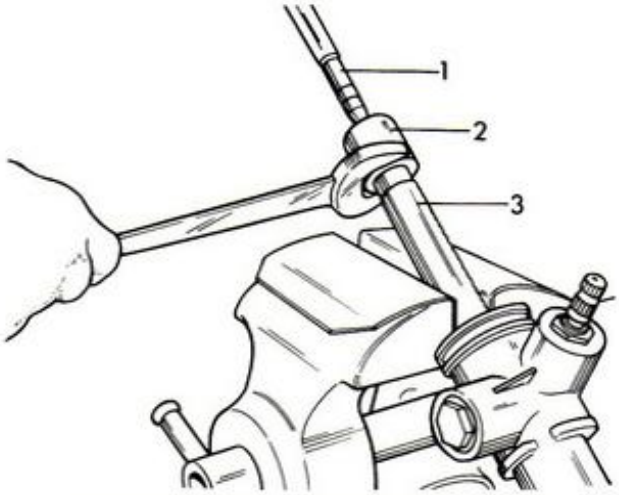

FIG 10:5 Removing ball joint from rack

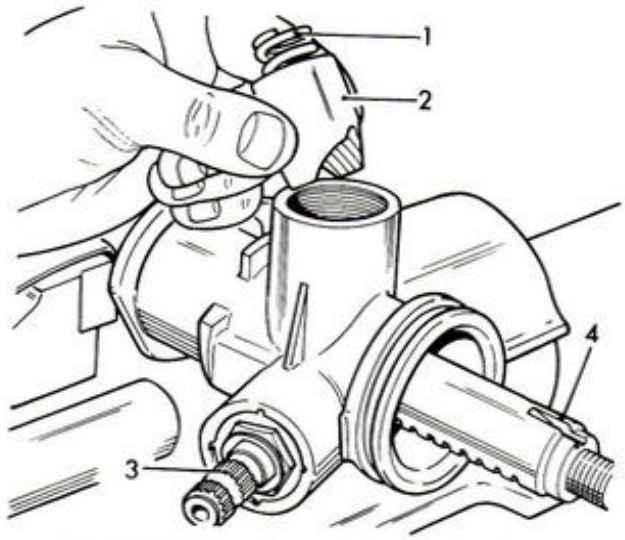

FIG 10:6 Removing centring bush and rack

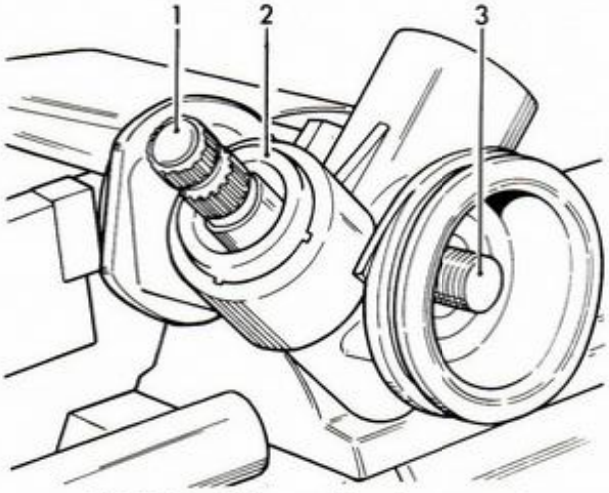

FIG 10:7 Pinion and bearing removal

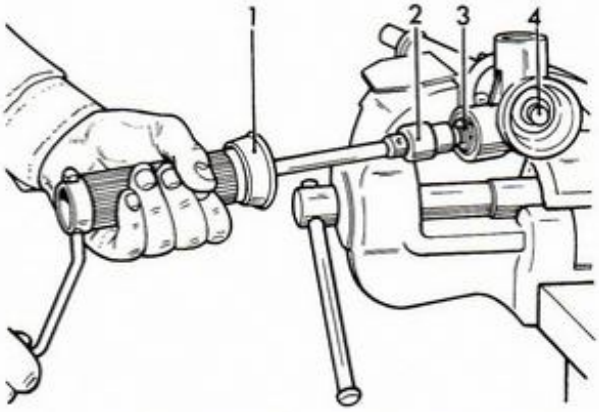

FIG 10:10 Checking pinion turning torque

Key to Fig 10:10 1 Dynamometer (tool A.95697) 2 Socket (tool A.95697/7) 3 Internally threaded nut 4 Rack

then install pinion shaft 1 and upper plastic bearing 2, lubricating with SAE 90 (not EP) oil.

Smear the pinion shaft retainer nut with Curil K2 or similar sealant, then fit to steering gear housing and tighten to 22 to 23lb ft (3.0 to 3.2kgm). Now slacken the nut through 230°. Use a torque wrench 1 and suitable adaptor 2 to check the torque necessary to turn the pinion shaft and move the rack (see **FIG 10:10**). This should not exceed 4.0lb ft (0.5kgm). If necessary, adjust by slackening the retainer a little. Recheck the torque needed to turn the pinion shaft. When correct, lock the retainer 1 (see **FIG 10:11**) by staking to the housing at four places 2. Ensure that the staking prevents rotation of the retainer under a torque of 11lb ft (1.5kgm).

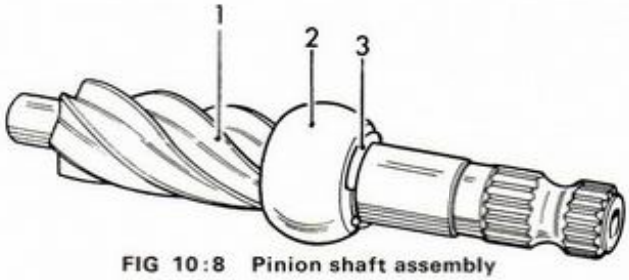

FIG 10:8 Pinion shaft assembly

Key to Fig 10:8 1 Pinion gear 2 Bearing 3 Circlip

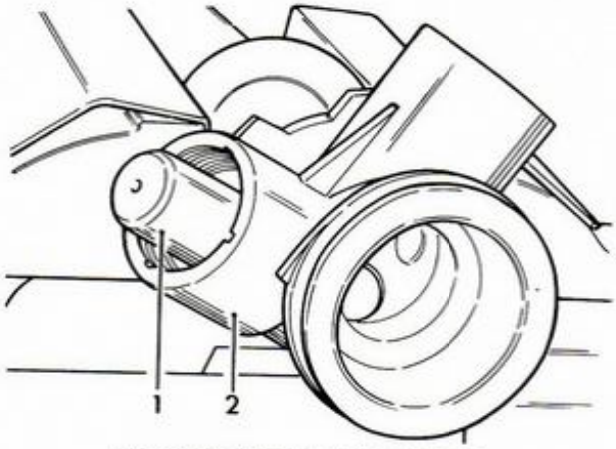

FIG 10:9 Roller bearing removal

Turn the pinion shaft as necessary to centralise rack 4 in the housing (see **FIG 10:6**). Install the rack centring bush 2 with spring 1, smear the retainer plug threads with Curil K2 or similar, then install and tighten the plug sufficiently to retain the bush.

Lubricate the ball joint with an approved grade of oil, then screw the ball joint collar on to the rack to the end of the threaded section (see **FIG 10:12**). Tighten the collar to 11lb ft (1.5kgm) then lock by staking collar 5 to rack slot 3 at point 4. Install one rubber gaiter and attach to tie rod and housing with the clamps, then hold the steering gear assembly with the fitted gaiter downwards. Pour 5.0 to 5.5oz (145 to 155cc) of an approved grade of oil into the open end of the steering gear housing. Slide the second gaiter into position over the housing, then secure to the housing and tie rod with the clamps. On completion, check that the rack has a resistance to movement in the housing equal to a pull of 55 to 77lb (25 to 35kg). This check should be made with the rack near the central position. If resistance to movement is outside limits, the retainer plug for spring and bush shown at 1 and 2 in **FIG 10:6** should be tightened or slackened a little as necessary, then locked by staking at four places. Staking must be secure enough to prevent the retainer plug from unscrewing under a torque of 11lb ft (1.5kgm).

Refitting:

Centralise the steering rack in the housing and ensure that the steering wheel spokes are horizontal, then install the assembly in the reverse order of removal. The rack can be centralised by counting the number of pinion shaft turns needed to move the rack fully from one side of the steering gear housing to the other, then turning the pinion shaft by half the number of counted turns to move the rack back to the central position. Ball joint securing nuts should be tightened to 25lb ft (3.5kgm) and steering gear housing to crossmember bolts to 18lb ft (2.5kgm). On completion, check and if necessary adjust front wheel alignment as described in the next section.

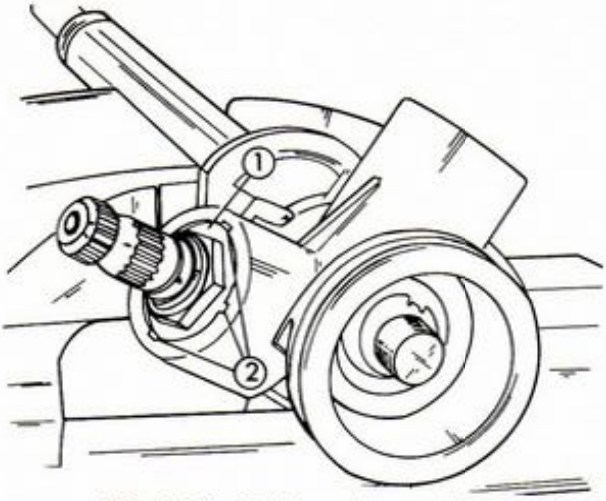

FIG 10:11 Staking pinion retainer

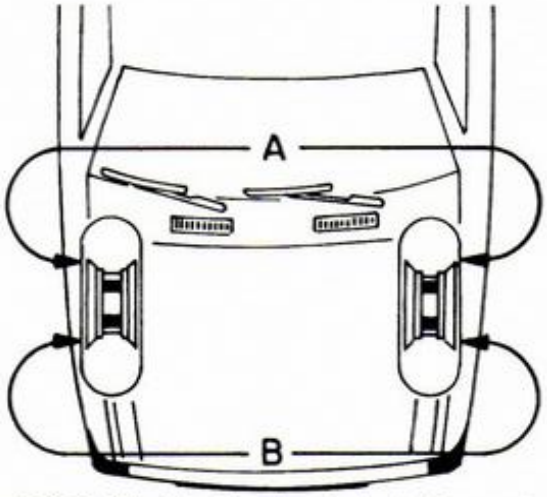

FIG 10:13 Checking front wheel alignment

10:5 Front wheel alignment

The specified dimension for the front wheel toe-in is given in **Technical Data**. Toe-in is the amount by which dimension **B** in **FIG 10:13** is less than dimension **A** when the car is loaded with four persons. Although this measurement is best made and the adjustment set by a service station having special optical equipment, an acceptable degree of accuracy can be obtained by using a simple tracking gauge in the following manner:

Place the car on a level floor with the wheels in the straightahead position. Make sure that the tyres are correctly inflated and that the car is loaded with four persons or equivalent weight.

Make a chalk mark on the wheel rims at point **A** on each side of the car, and at wheel centre height. Measure the distance between the two marks, then roll the car forward by half a revolution of the road wheels so that the marks are now at the front of the wheels. Measure the distance **B** between the chalk marks. The amount by which the first measurement exceeds the second is the toe-in measurement.

To adjust front wheel alignment, first release the clamps securing the outer ends of the steering gear rubber gaiters to the tie rods to prevent them from being twisted when the tie rods are turned.

Slacken the outer ball joint locknut on each side of the car, holding the ball joint assemblies with a spanner on the flats provided to avoid damage (see **FIG 10:1**). Adjust the toe-in by turning the rods by equal amounts, so that the same amount of thread is visible at each end. Turn the tie rods using a spanner on the flats provided. Tighten the ball joint locknuts and recheck the toe-in. On completion, secure the clamps at the outer ends of the rubber gaiters.

The front wheel alignment should be checked at 10,000km (6000 mile) or 6 monthly intervals.

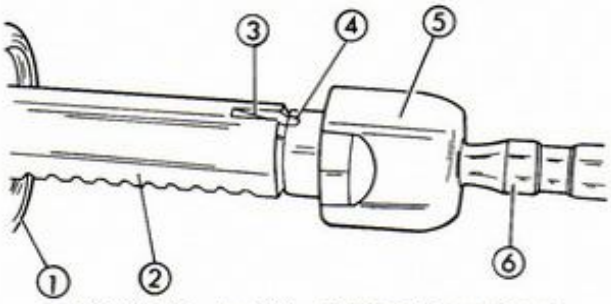

FIG 10:12 Installing ball joint to rack end

Key to Fig 10:12 1 Steering gear housing 2 Rack 3 Slot 4 Staking point 5 Collar 6 Ball joint

10:6 Fault diagnosis

(a) Wheel wobble

1 Unbalanced wheels and tyres
2 Slack steering connections
3 Incorrect front wheel alignment
4 Excessive play in steering gear
5 Steering gear loose on crossmember
6 Worn hub bearings

(b) Wander

1 Check 2, 3, 4 and 5 in (a)
2 Front and rear wheels not in line
3 Uneven tyre pressures
4 Uneven tyre wear
5 Defective dampers
6 Weak coil spring

(c) Heavy steering

1 Incorrect front wheel alignment
2 Very low tyre pressures
3 Lack of lubricant in steering gear
4 Tie rod or suspension ball joints tight
5 Steering column out of line or strained
6 Steering shaft bent
7 Steering shaft bearings tight

(d) Lost motion

1 Play in steering shaft universal joints
2 Loose steering wheel
3 Steering gear loose on crossmember
4 Play in steering gear rack and pinion
5 Worn tie rod or suspension ball joints

NOTES

CHAPTER 11

THE BRAKING SYSTEM

11 : 1 Description
11 : 2 Routine maintenance
11 : 3 Disc brakes
11 : 4 Drum brakes
11 : 5 The brake regulator
11 : 6 The master cylinder
11 : 7 Vacuum servo unit
11 : 8 Bleeding the brakes
11 : 9 The handbrake
11 : 10 Fault diagnosis

11 : 1 Description

Disc brakes are fitted at the front wheels, self-adjusting drum brakes at the rear, all four brakes being operated hydraulically from the master cylinder. The handbrake operates on the rear wheels only by means of a cable and lever linkage. A brake regulating valve, operated mechanically by the pitch of the body on the suspension, reduces the effect of braking on the rear wheels according to the degree of retardation, to minimise the possibility of the rear wheels locking under heavy braking. A vacuum servo unit is connected directly between the brake pedal and the master cylinder and, by using the depression in the inlet manifold, assists the pressure applied by the driver on the brake pedal.

All models are fitted with a tandem braking system. A special master cylinder is fitted so that the front and rear brakes are hydraulically independent. The master cylinder is so designed that a failure in one half of the system will still allow the other half to operate, though with an increased pedal stroke, so that the car can be safely stopped. As well as increased pedal stroke, the failure on one half of the system will reduce the overall efficiency of the braking system as only two brakes will be operating.

11 : 2 Routine maintenance

At 5000km (3000 mile) or 3 monthly intervals check the level of fluid in the master cylinder reservoir and top up if necessary. Each half of the reservoir is connected to the master cylinder by means of a pipe. Wipe dirt from around the reservoir cap before removing and check that the vent holes in the cap are unobstructed. If frequent topping up is required, the system should be checked for leaks, but it should be noted that with disc brake systems the fluid level will drop gradually over a period of time due to the movement of caliper pistons compensating for friction pad wear. Use only Fiat DOT 3 brake fluid, or a brake fluid conforming to FMVS No 116. **Never use anything but the recommended fluid.**

On some later models an electric warning device is fitted to the reservoir of the master cylinder: when the fluid level drops below the 'MIN' mark it causes a warning lamp on the facia panel to light up. The correct operation of the device should be checked occasionally by pressing down on the reservoir cap when the ignition is switched on and seeing that the warning lamp comes on.

The front brake pad thickness should be checked every 5000km (3000 mile) or 3 months. The rear linings and brake cylinders should be inspected every 10,000km (6000 mile) or 6 months. When the pad and shoe friction linings have worn down to a thickness of approximately 1.5mm (0.06in), or will have done so by the next service, they should be renewed.

At each service interval all brake pipes, hoses and unions should be inspected for leakage, damage and

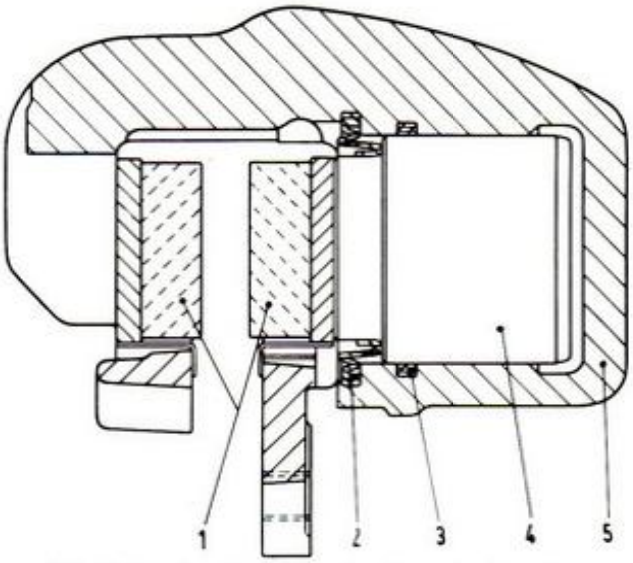

FIG 11 : 1 Section through a front brake caliper

Key to Fig 11 : 1 1 Pad linings 2 Dust boot 3 Seal 4 Piston 5 Caliper body

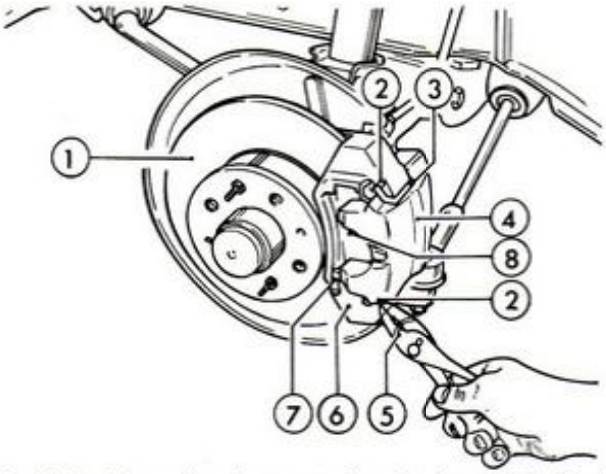

FIG 11 : 2 Removing the cotterpins. For key see Fig 11 : 5

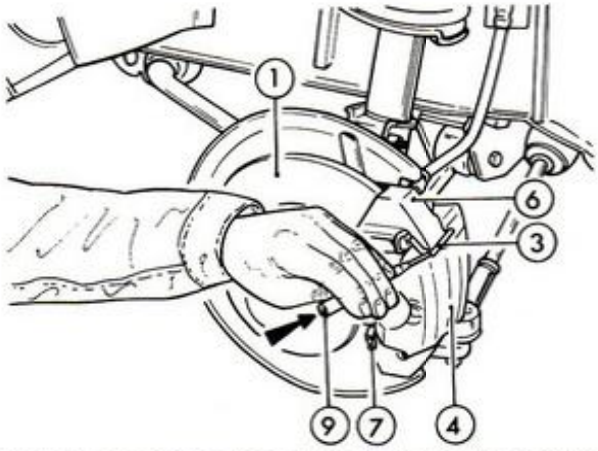

FIG 11 : 3 Removing the retainer blocks. For key see Fig 11 : 5

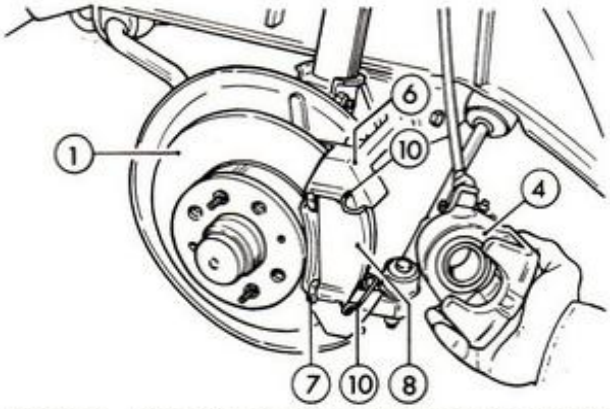

FIG 11 : 4 Removing the brake pads. For key see Fig 11 : 5

corrosion. The adjustment and condition of the handbrake cables and linkage should also be checked and lubricated.

Brake fluid should be changed at 40,000km (24,000 mile) or 2 yearly intervals maximum. The complete braking system, including the servo, should be overhauled every 60,000km (36,000 mile) or 3 years.

11 : 3 Disc brakes

FIG 11 : 1 shows a section through a front disc brake caliper. These are of the non-compensating pattern and comprise a simple hollow piston 4 within the cylinder of caliper body 5, sealed against fluid leakage by seal 3, and against the ingress of dirt by rubber boot 2. Piston motion is communicated directly to one brake pad 1, while the reaction to the pressure on the brake disc pulls the caliper body and the opposing pad into contact with the opposite face of the disc, the two pads gripping the disc firmly between them.

Checking and renewing brake pads:

If the brake unit is being removed for pad renewal or for servicing of the suspension system, the flexible hose can remain attached to the caliper. Under these conditions, the caliper should be suitably supported to avoid strain on the flexible hose. If the caliper is being removed for internal servicing, plug the outlet in the fluid reservoir with a pointed piece of hardwood and disconnect the flexible hose from the caliper. Alternatively, plug the end of the flexible hose when it is removed to avoid fluid loss.

The brake unit may be cleaned using a solution of hot water and Fiat LDC detergent or with methylated spirits. **Use no other solvent to clean the caliper assembly or the rubber seals will be damaged.** Use a small brush to clean out crevices then dry with compressed air.

Apply the handbrake, slacken the front wheel fixings, then raise and safely support the front of the car on floor stands and remove the road wheels.

Remove the cotterpins from the caliper retaining blocks as shown in **FIG 11 : 2**. Use a suitable punch to drive the caliper to bracket retainer blocks from the caliper as shown in **FIG 11 : 3**. Remove the brake pads from the caliper assembly as shown in **FIG 11 : 4**, marking

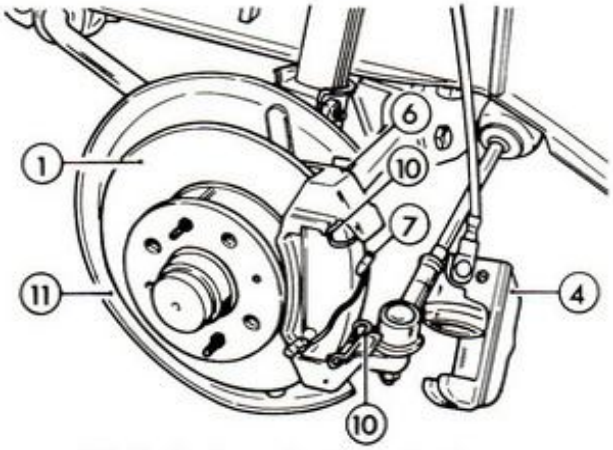

FIG 11:5 Removing the pad springs

Key to Figs 11:2, 11:3, 11:4 and 11:5 1 Brake disc 2 Sliding block retaining pin 3 Sliding block 4 Brake caliper 5 Pliers 6 Caliper supporting bracket 7 Pad anti-rattle plate 8 Pad 9 Punch 10 Spring clip pushing caliper against bracket 11 Brake shield

them for refitting in their original positions if they are not to be renewed. Remove the pad springs as shown in **FIG 11:5**.

If the pads are fit for further service it is essential that they are installed back into their original positions and not interchanged. Pads must be renewed when the thickness of the linings has worn down to 1.5mm (0.06in). Pads must also be renewed if they are contaminated with grease or oil, or are cracked or deformed. If any one friction pad is worn or faulty, all four front brake pads should be renewed. Do not renew pads singly or on one side only, as uneven braking will result.

Install the brake pads and reassemble the caliper in the reverse order of dismantling. The extra thickness of new pads will cause the caliper piston to be pushed back back into its bore. This will cause the fluid level in the brake master cylinder reservoir to rise and it may be necessary to siphon off a little of the fluid to prevent overflow. Note that brake fluid is toxic and that it can damage paintwork. If the brake hose was disconnected, bleed the brakes as described in **Section 11:8**. On completion, pump the brake pedal hard several times to adjust the brakes. If this is not done the brakes may not work the first time that they are used on the road. Check the level of fluid in the reservoir and correct if necessary.

Brake disc:

Check the runout of the brake disc with a dial gauge as shown in **FIG 11:6**, making sure that the hub end float is correct as described in **Chapter 9**. The runout, measured at a point approximately 2mm (0.08in) from the disc edge, must not exceed 0.15mm (0.006in). If the runout is excessive, first remove the disc and check that there are no specks of dirt between the mating faces of hub and disc, then try rotating the disc 180° relative to the hub to see whether this will reduce the runout. If runout is still excessive, or if the disc is deeply scored, renew the disc or have it machined down at a Fiat service station.

To remove the disc, remove the two attaching bolts and pull the disc from the hub. If the disc 1 (see **FIG 11:7**)

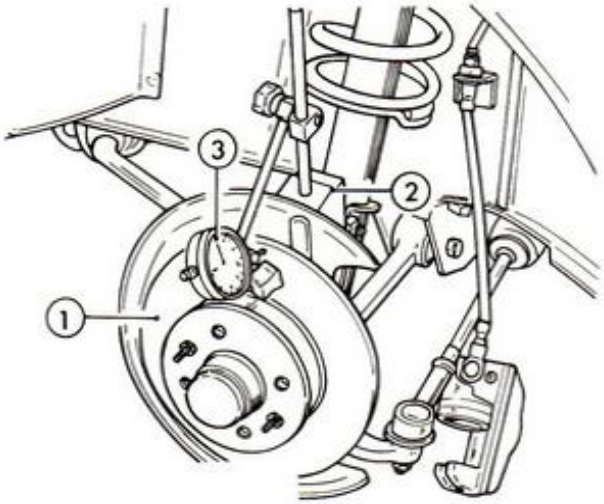

FIG 11:6 Measuring brake disc runout

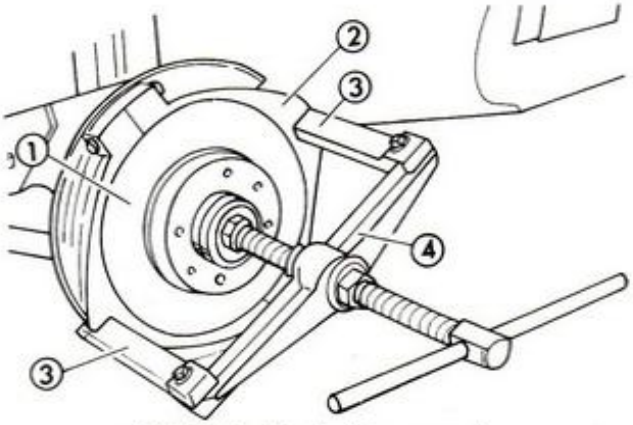

FIG 11:7 Brake disc removal

Key to Fig 11:7 1 Brake disc 2 A.47211/754 3 A.40005/004 4 A.47210/371

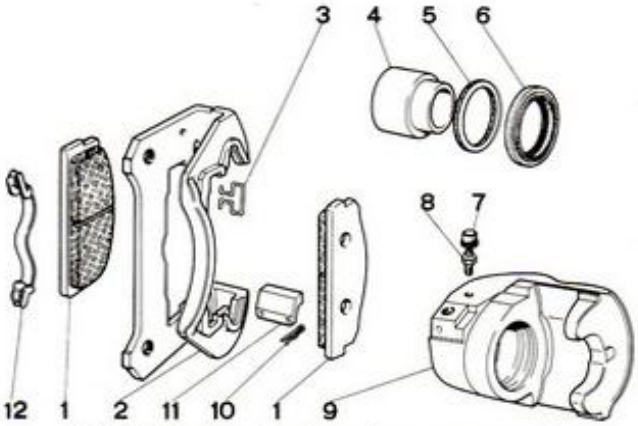

FIG 11:8 Front brake caliper components

Key to Fig 11:8 1 Pad and lining 2 Caliper support bracket 3 Spring 4 Piston 5 Seal 6 Dust boot 7 Dust cap 8 Bleed screw 9 Caliper body 10 Cotterpin 11 Retainer block 12 Pad retaining spring

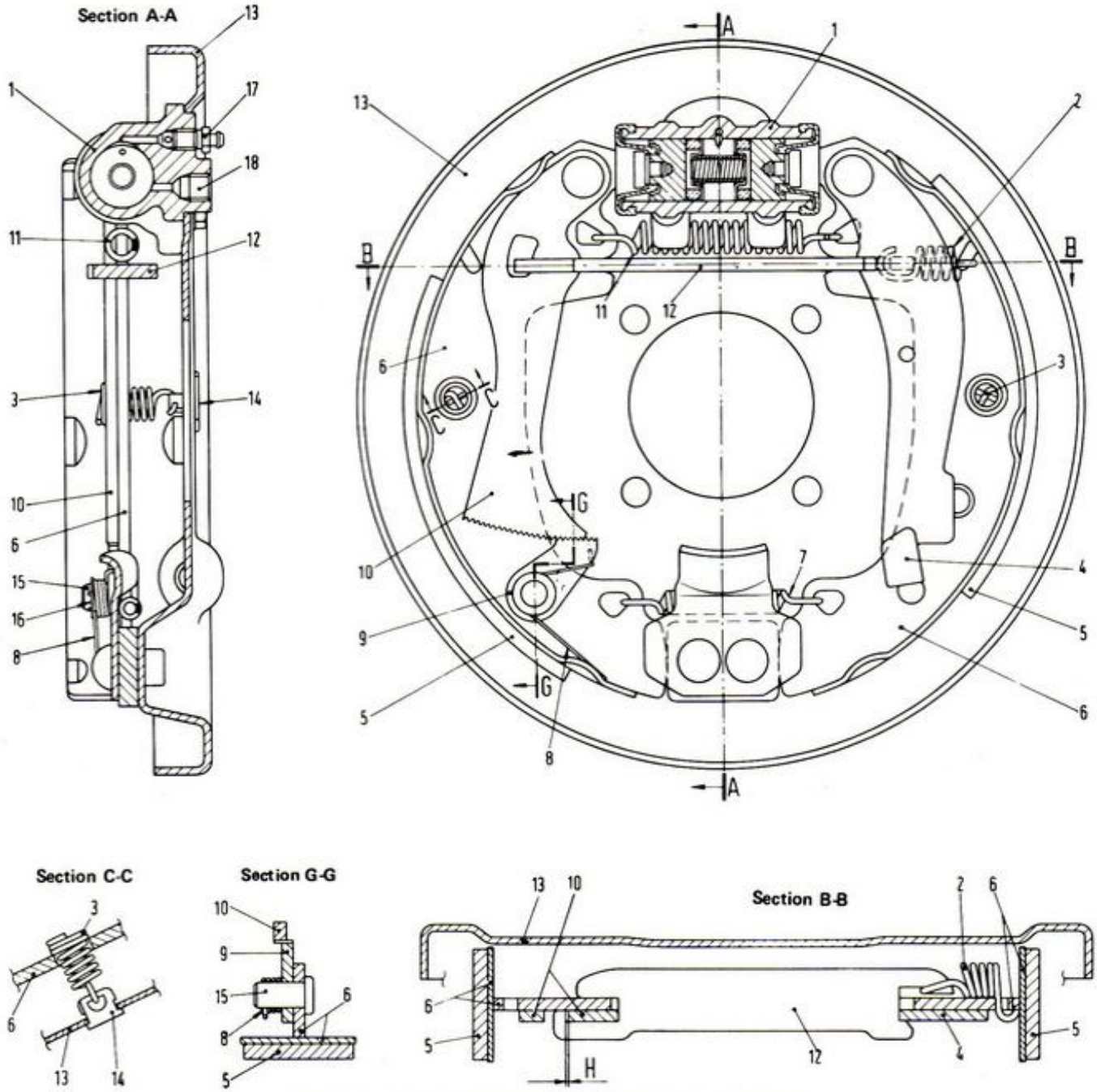

FIG 11:9 Rear drum brake layout. Lefthand unit shown

Key to Fig 11:9 1 Wheel cylinder 2 Spring 3 Shoe retaining spring 4 Link 5 Lining 6 Shoe 7 Lower return spring 8 Spring 9 Self-adjusting link 10 Adjusting link 11 Upper return spring 12 Shoe control link 13 Backplate 14 Clip 15 Pin 16 Washer 17 Bleed screw 18 Fluid inlet port Clearance H equals 1.0 to 1.2mm (0.04 to 0.05in)

cannot be pulled off by hand, use suitable support plates 2 in conjunction with a suitable puller 4, hooking the puller arms 3 to the support plates. The illustration shows the use of the special Fiat tools. It is not recommended that a puller is used directly against the disc, without the use of support plates, as disc distortion may result. Never attempt to hammer the disc from the hub, otherwise it may be seriously distorted or cracked.

Clean the disc with a suitable solvent to remove any grease or finger marks before refitting the caliper. Deposits on the disc can be cleaned off by softening with solvent and scrubbing off gently with worn fine emery-cloth.

Servicing a caliper:

Remove the caliper assembly as described previously. **FIG 11:8** shows caliper components. Use compressed air at the fluid inlet port to force the piston out of its bore. Carefully remove and discard the dust cap and piston seal. Wash the remaining parts in commercial alcohol,

methylated spirits or clean approved brake fluid. **Use no other cleaner or solvent on brake components.** Inspect all parts for wear or damage and the piston and cylinder bore for scoring or pitting. Corrosion or damage to piston or cylinder bore will dictate the fitting of a new cylinder assembly, as pistons are not supplied separately for service.

Use new rubber parts throughout, fitted with the fingers only to avoid damage to the sealing lips. Dip all internal parts in clean approved brake fluid during assembly. Fit the piston seal, making sure that it is fully and squarely seated. Press the piston fully and squarely back into the bore, taking great care not to allow it to tilt and jam in the bore. Install the dust cover around the piston and into its bore in the caliper. Refit the remaining caliper components in the reverse order of removal. On completion, bleed the brakes as described in **Section 11 : 8**.

11 : 4 Drum brakes

The layout of a rear drum brake unit including self-adjustment mechanism components is shown in **FIG 11 : 9**. As brake linings 5 wear in normal use, the free play between brake drum and shoes 6 increases so that self-adjuster link 10 with ratchet teeth will be forced by spring 2, through reaction rod 12, to move as necessary through tooth stop 9 and therefore assume a new position which will eliminate the free play. Whenever the brake pedal is operated, free play in the mechanism is taken up by this means.

When the brake pedal is released, return springs 7 and 11 will return the brake shoes through a shorter distance than before, because self-adjusting lever 10, in contact with toothed stop 9, will prevent further movement of the shoes. The shoes will remain in the new position until free play between linings and drum increases due to wear.

Removing brake shoes:

Apply the handbrake and slacken the rear wheel bolts. Chock the front wheels firmly against rotation, then raise and safely support the rear of the car on floor stands. Remove the rear road wheels and fully release the handbrake.

Remove the two studs 1 (see **FIG 11 : 10**) and remove brake drum 2. If the brake drum cannot be pulled off by hand, use a suitable puller tool. Do not attempt to drive the drum from position as this may result in damage.

Refer to **FIG 11 : 11**. Install tool A.72257 to the wheel cylinder to retain the pistons, as shown at 6. If such a tool is not available, wind a length of soft wire around the cylinder for this purpose. Use a suitable pair of curved pliers to unhook upper return spring 7 from brake shoes 8. Use tool A.72264, or make up a similar tool with a slotted end from an old screwdriver, to remove the shoe retaining springs (see **FIG 11 : 12**). Push spring 3 (see **FIG 11 : 11**) into backplate with the special tool, then turn the spring to disconnect it from clip 1 (see **FIG 11 : 13**). Use a suitable pair of pliers to unhook lower return spring 12 from the brake shoes (see **FIG 11 : 14**). Disconnect handbrake cable 11 from the link, then remove the brake shoes, taking care not to contaminate the friction linings with grease or dirt.

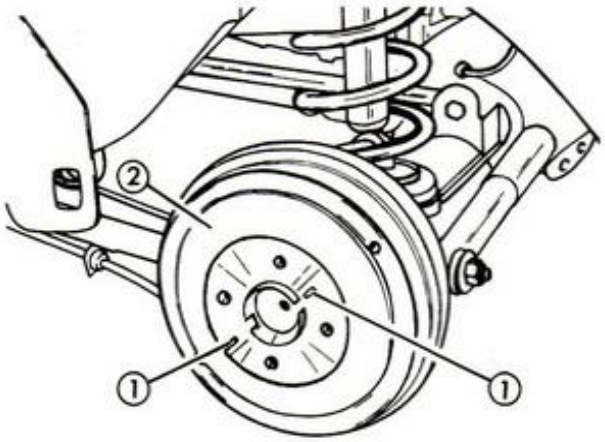

FIG 11 : 10 Brake drum removal. For key see Fig 11 : 11

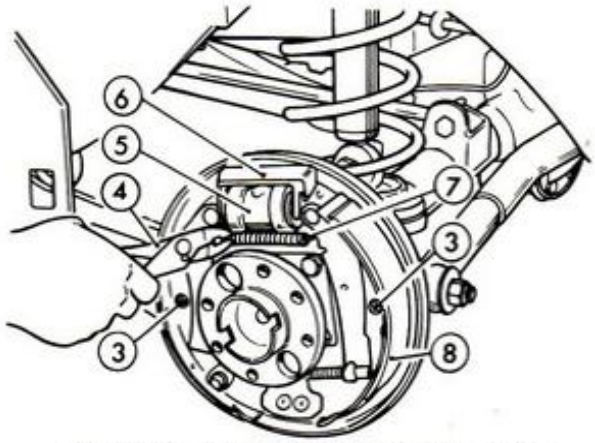

FIG 11 : 11 Removing upper return spring

Key to Figs 11 : 10 and 11 : 11 1 Retaining studs 2 Brake drum 3 Shoe retaining spring 4 Pliers 5 Wheel cylinder 6 Retaining tool 7 Upper return spring 8 Brake shoe

FIG 11 : 12 Special tool used to disconnect retaining springs

To remove the self-adjusting mechanism, refer to **FIG 11 : 15** and lever spring retainer 4 from pin 3. Remove spring 1 and adjuster 5. To remove lever 6, remove the clip securing the lever to the back of shoe 7.

Clean all dirt and grease from the inside of the brake assembly. Clean the inside surfaces of the brake drum, using a suitable solvent to remove all traces of grease. If the inside surface of the drum, against which the friction linings operate, is scored or out of round, the drum can be refaced at a Fiat service station. However, if re-surfacing would require the removal of too much metal, a new drum will be required.

Refitting:

This is a reversal of the removal procedure. Set the automatic adjustment mechanism so that sufficient

FIG 11:13 Removing shoe retaining springs. For key see Fig 11:14

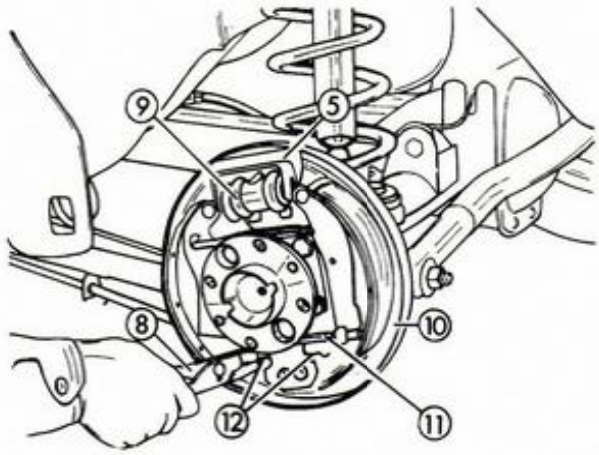

FIG 11:14 Removing lower return spring and handbrake cable

Key to Figs 11:13 and 11:14 1 Clip 2 Bolts 3 Bleed screw 4 Brake pipe 5 Retaining tool 6 Shoe retaining spring 7 Special tool 8 Pliers 9 Wheel cylinder 10 Backplate 11 Handbrake cable 12 Lower return spring

clearance exists between the brake shoes and drum to allow the drum to be refitted. On completion, pump the brake pedal hard several times to correctly adjust the brakes.

Servicing a wheel cylinder:

Remove the rear brake shoes as described previously. Refer to **FIG 11:13** and disconnect brake pipe 4 from the wheel cylinder. Plug the end of the pipe to prevent fluid leaks and the entry of dirt. Remove the two bolts 2 to detach the wheel cylinder from the brake backplate. Remove the piston retaining tool or the soft wire fitted previously.

A section through the wheel cylinder assembly is shown at 1 in **FIG 11:9**. Remove the dust boots from each end of the cylinder then remove the pistons, seals and spring.

Discard the rubber parts, then wash the remaining parts in commercial alcohol, methylated spirits or clean approved brake fluid only. Inspect the piston and cylinder bore surfaces for scoring or pitting, which would dictate the renewal of the cylinder complete.

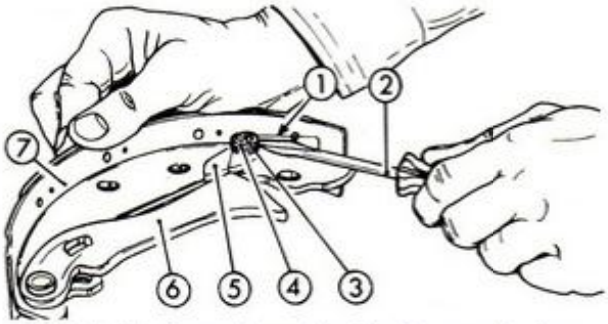

FIG 11:15 Removing self-adjusting mechanism

Reassemble the wheel cylinder using new seals and dust boots, installing the seals with the fingers only to avoid damage. Dip the pistons and seals in clean approved brake fluid before installing. Refit the wheel cylinder to the backplate and connect the brake pipe, then install the brake shoes as described previously. On completion, bleed the brakes as described in **Section 11:8**.

11:5 The brake regulator

The rear wheel brake regulator comprises a piston within a cylinder operated by a torsion bar. Movement of the piston varies the flow of hydraulic fluid to the rear brake cylinders according to the degree of braking effort applied to the car by application of the footbrake.

FIG 11:16 shows brake regulator installation details, **FIG 11:17** the operation of the regulator. Weight-transference to the front wheels during braking results in the rear of the chassis lifting away from the rear axle. This is translated as a downward pull by the rear axle case on the link coupled to the end of the torsion bar. At the opposite end, the short crank which has been bearing on the end of the regulator piston moves away from it and the piston now moves with it under the pressure of fluid from the master cylinder.

Up to this moment, the piston has been positioned by the torsion bar crank so that there is a free flow around its head and the piston seal is clear of the transverse slots in the piston. Under these conditions, any brake pressure applied is transmitted equally to all four brake units.

As the piston moves outwards the grooves are gradually closed, thus reducing the pressure to the rear brake units until, under maximum braking conditions, fluid entry to the rear brake circuit is completely cut off. Any further increase in pressure from the master cylinder now cannot be applied to the rear brake cylinders but only to the front. The rear brakes are still held partially on since the fluid already trapped in the lines cannot return.

As retardation decreases, the body returns to an even keel and the torsion bar re-exerts pressure on the piston to re-open the transfer route to the rear brake circuit.

Removing and dismantling regulator:

Chock the front wheels and raise the rear of the car on to floor stands, allowing the rear suspension to hang free. Plug the outlet in the fluid reservoir for the rear circuit with a pointed piece of hardwood and disconnect the two hydraulic lines to the brake regulator. Alternatively, plug the ends of the pipes when they are removed to prevent fluid loss. Remove the two bolts 10 (see **FIG 11:16**)

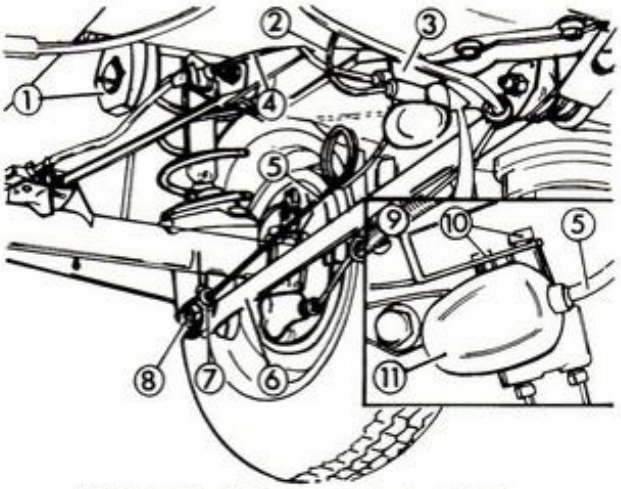

FIG 11:16 Brake regulator installation

Key to Fig 11:16 1 Rubber buffer 2 Pipe from master cylinder 3 Pressure regulator 4 Pipe to rear brakes 5 Torsion bar 6 Lower control arm 7 Support 8 Nut 9 Support 10 Bolts 11 Rubber boot

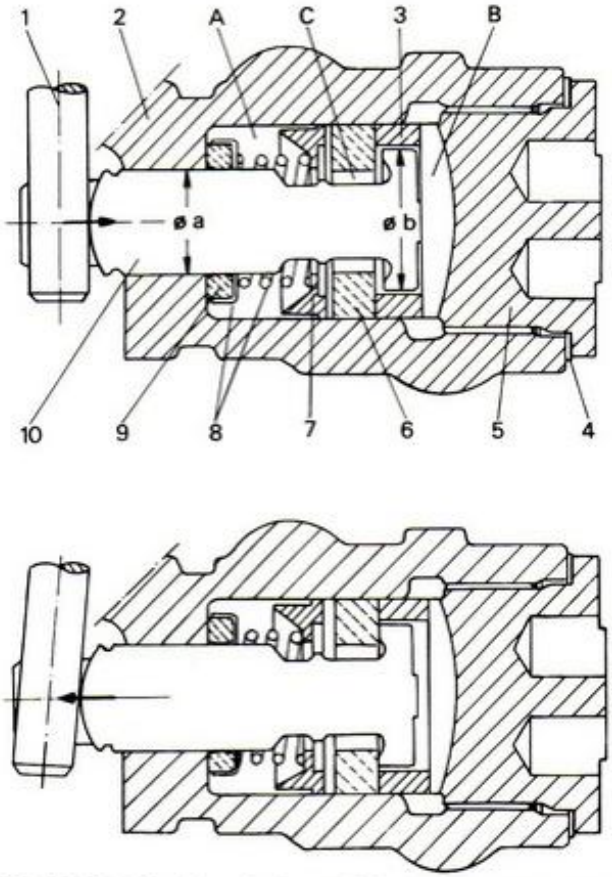

FIG 11:17 Sectioned views of the brake regulator at rest and in operation

Key to Fig 11:17 1 Torsion bar 2 Outer cylinder 3 Bush 4 Seal 5 Plug 6 Seal 7 Cup 8 Seal thrust ring and spring 9 Seal 10 Piston A Normal pressure chamber B Pressure regulating chamber C Grooves on piston and fluid transfer chamber a Piston rod diameter b Piston head diameter

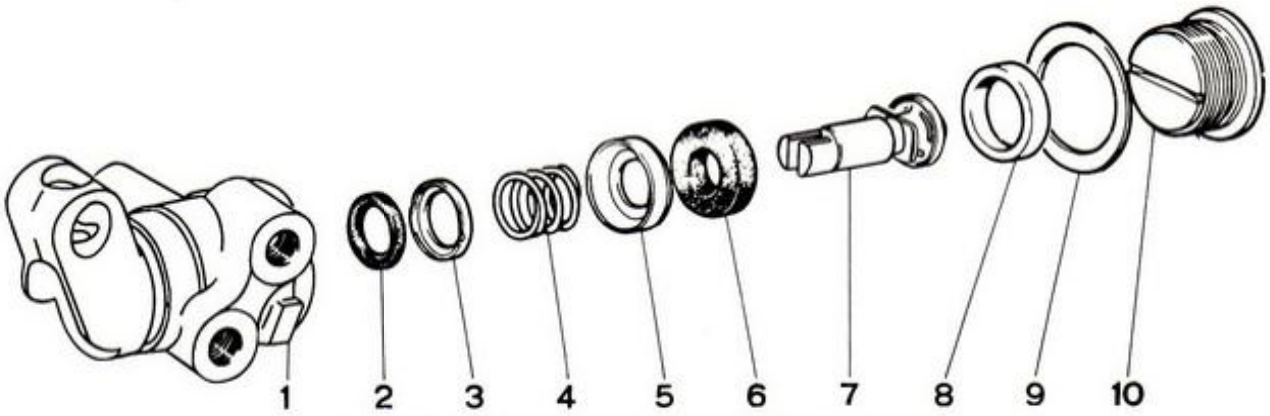

FIG 11:18 Components of the rear brake regulator

Key to Fig 11:18 1 Regulator body 2 Seal 3 Cup 4 Spring 5 Cup 6 Seal 7 Piston 8 Bush 9 Seal 10 Plug

securing regulator 3 to support 9, then slide torsion bar 5 from support 7 on rear axle. Remove the dust boot 11 from torsion bar 5.

Unscrew the end plug from the regulator and remove the internal components as shown in **FIG 11:18**. Discard the rubber components and wash the remaining parts in commercial alcohol, methylated spirits or clean brake fluid only. Examine all parts for wear, damage or corrosion and renew any found to be unserviceable. Fit new rubber components when reassembling the regulator. Reassemble in the reverse order of dismantling, lubricating all internal components with clean brake fluid.

Installing the regulator:

Refer to **FIG 11:19**. Loosely attach the brake regulator, with torsion bar and dust boot, to its support bracket by means of bolts 4 and 5. With the torsion bar 7 free of bracket 9, bring the end of the bar to a point where dimension X, between end of bar and position of rear axle bump stop 11, is 339mm (13.35in) for Saloon models, or 327 ± 5mm (12.9 ± 0.20in) for Estate or Station Wagon models. From May 1978, this dimension is 327 ± 5mm for Saloon and 2000 Sport models and 310 ± 10mm for Estate models.

With the torsion bar correctly positioned, lift dust boot 3 from the regulator and make sure that the bar end 1 is contacting the regulator piston 6. If not, pivot the compensator body on bolt 4 until light contact is made. This done, fully tighten bolt 4 followed by bolt 5. Lightly coat the bar end 1 and face of piston 6 with an approved grade of grease, then refit rubber boot 3. Hook the bar into bracket 9 and fit grommet 10.

The procedure described should correctly set the brake regulator linkage, but if necessary the installed position of the linkage can be checked with special gauge equipment at a Fiat service station.

On completion, refit the fluid pipes to the regulator and bleed the brakes as described in **Section 11:8**.

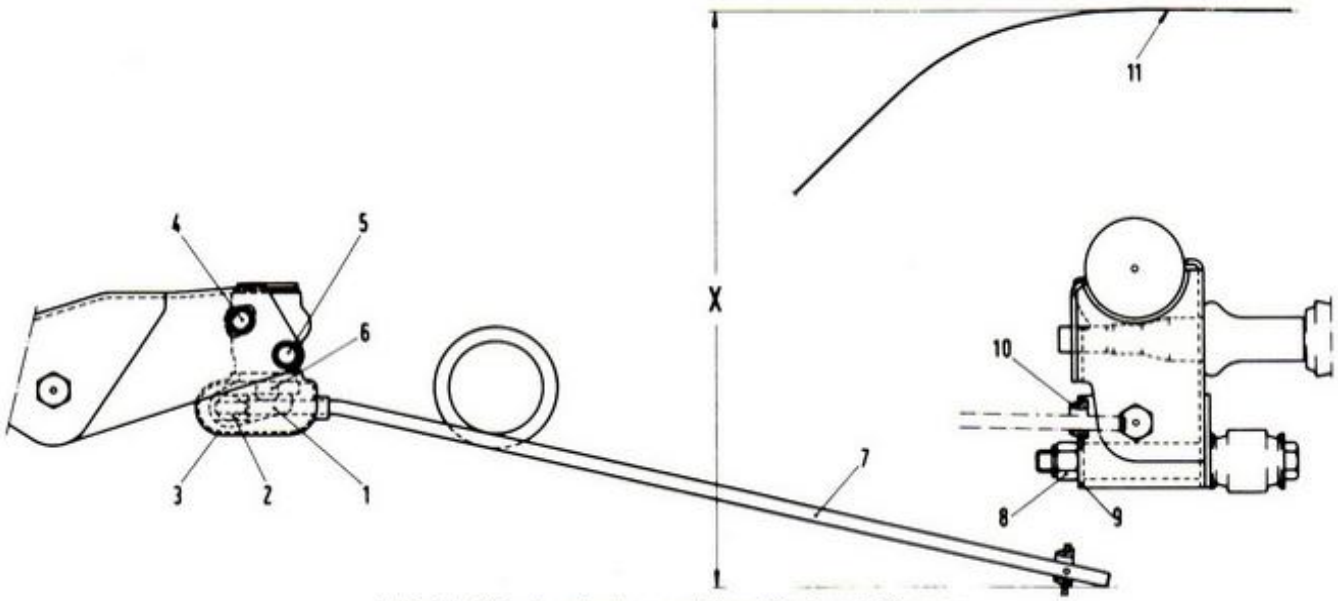

FIG 11:19 Rear brake regulator adjustment diagram

Key to Fig 11:19 1 Torsion bar end 2 Pin 3 Rubber boot 4, 5 Securing bolts 6 Compensator piston 7 Torsion bar 8 Nut 9 Bracket 10 Grommet 11 Bump stop fitting point Dimension X – see text

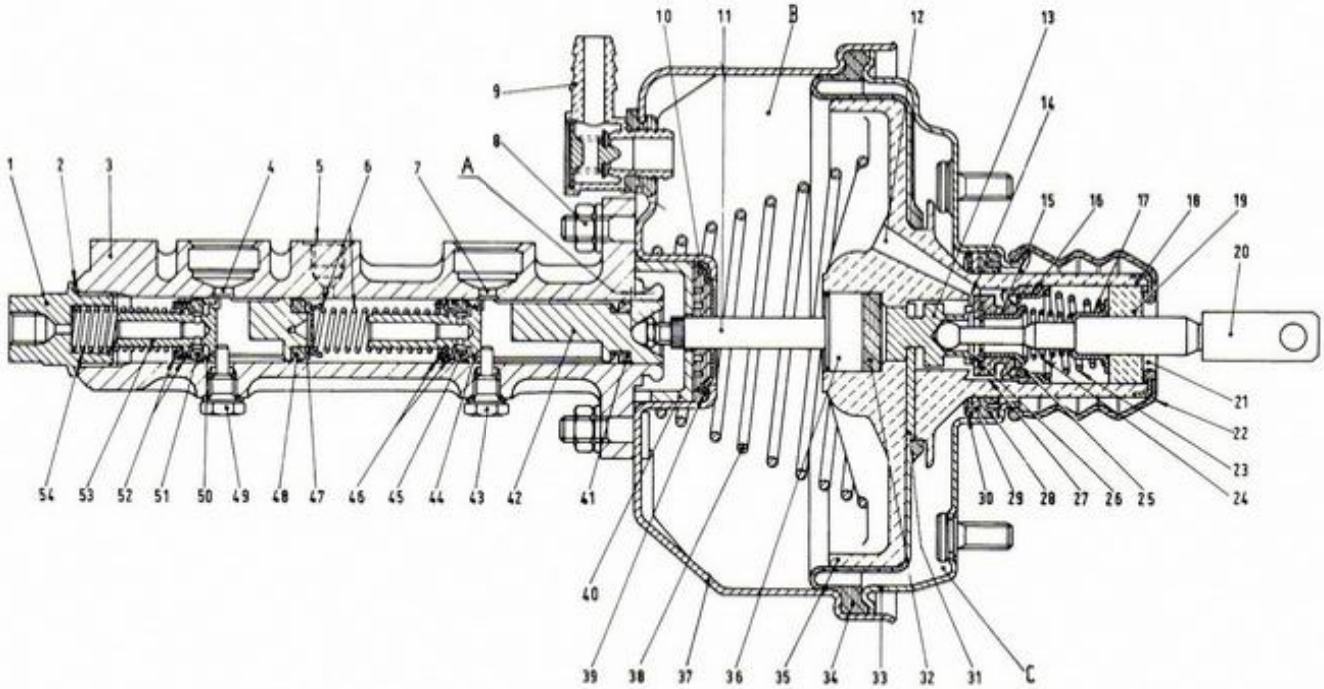

FIG 11 : 20 Sectioned view of the master cylinder and vacuum servo unit

Key to Fig 11 : 20 1 Plug 2 Seal 3 Cylinder body 4 Connector seat 5 Front wheel brake connector 6 Spring and cup 7 Connector seat 8 Nut 9 Vacuum line fitting 10 Front seal 11 Piston control rod 12 Vacuum duct 13 Piston-valve 14 Vacuum duct orifice 15 Valve 16 Cup 17 Cup 18 Control piston guide tube 19 Filter element 20 Valve control rod 21 Air inlet 22 Dust boot 23 Piston-valve return spring 24 Valve return spring 24 Valve (15) cup 26 Atmospheric pressure air passage 27 Vacuum orifice 28 Rear seal 29 Shoulder ring 30 Lockwasher 31 Piston retainer 32 Reaction disc 33 Rear body 34 Diaphragm 35 Control piston 36 Working piston 37 Front body 38 Piston return spring 39 Cup 40 Guide bushing 41 Seal 42 Rear piston 43 Plug and seal 44 Spacer 45 Seal 46 Spring and cup 47 Flat washer 48 Seal 49 Plug and seal 50 Spacer 51 Seal 52 Spring and cup 53 Front piston 54 Spring and cup A = Distance piston control rod extends past master cylinder mounting surface 0.033 to 0.040in (0.825 to 1.025mm) B = Front chamber C = Rear chamber

11 : 6 The master cylinder

A sectioned view of the master cylinder and brake vacuum servo unit is shown in **FIG 11 : 20**, the installation of the unit being shown in **FIG 11 : 21** or **11 : 22**.

Removal:

Carefully siphon the fluid from brake master cylinder reservoir. **Note that brake fluid is toxic and that it can damage paintwork.** Disconnect the pressure lines from the master cylinder, then unscrew the nuts that secure the master cylinder to the servo and remove the unit from the car. Keep a large piece of rag beneath the master cylinder during the removal procedure to catch any fluid spillage.

Refitting:

Install the master cylinder in the reverse order of removal. When all connections have been made, fill the reservoir with fresh approved brake fluid and bleed the system as described in **Section 11 : 8**.

Servicing:

Wash the outside of the master cylinder unit with methylated spirits or hot water and Fiat LDC detergent. **Use no other solvent.** Remove the end plug and

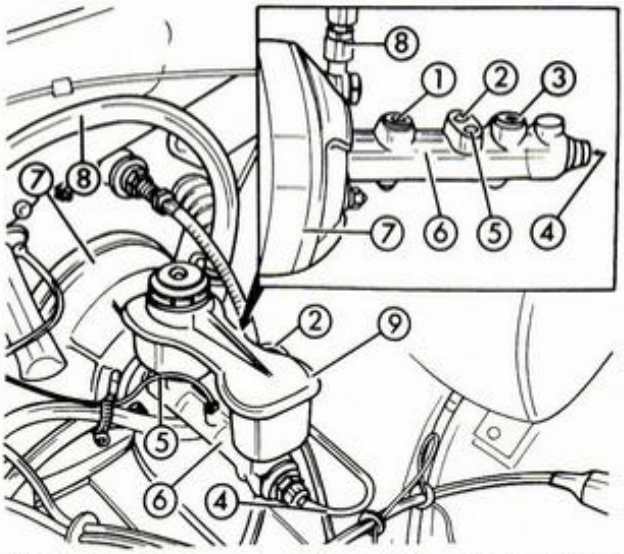

FIG 11 : 21 Master cylinder installation, 1300 and 1600 models

Key to Fig 11 : 21 1 Front brake fluid inlet point 2 Feed to left front brake 3 Rear brake fluid inlet port 4 Feed to rear brakes 5 Feed to right front brake 6 Master cylinder 7 Brake servo 8 Vacuum pipe 9 Fluid reservoir

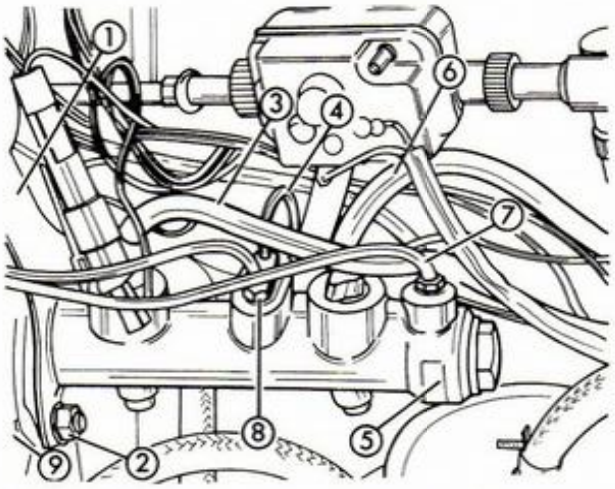

FIG 11:22 Master cylinder installation, 1800 models

Key to Fig 11:22 1 Bracket 2 Nut 3 Hose 4 Pipe 5 Master cylinder 6 Hose 7, 8 Pipes 9 Vacuum servo

dismantle the master cylinder components into the order shown in **FIG 11:23**. Remove and discard all the old rubber seals.

Wash all remaining parts in commercial alcohol, methylated spirits or approved brake fluid. **Use no other cleaner or solvent on the components.** Inspect all components for wear, corrosion or scoring. The cylinder bore should be completely smooth. If any faults are found, the entire master cylinder must be renewed as the pistons are not supplied for service separately.

Obtain a service kit which contains a complete set of new seals. Wet the new seals with clean approved brake fluid and fit them back into position, using only the fingers and rotating the seals so that they seat fully and squarely. Dip the internal parts in brake fluid and insert them back into the bore while still wet. **Take care not to bend or damage the lips of the seals as they enter the bore.** Keep each piston pressed into the bore while fitting the plugs and seals 43 and 49 (see **FIG 11:20**). Use a new seal for each plug. Check that the pistons return freely after being pressed down the bore.

11:7 Vacuum servo unit

The vacuum servo unit operates to assist the pressure applied at the brake pedal and so reduce braking effort. The vacuum cylinder in the servo is connected to the engine inlet manifold by a hose. A section through the servo and master cylinder assembly is shown in **FIG 11:20**.

Testing:

To test the servo unit, switch off the engine and pump the brake pedal several times to clear all vacuum from the unit. Hold a steady light pressure on the brake pedal and start the engine. If the servo is working properly, the brake pedal will move further down without further foot pressure, due to the vacuum induced in the system.

With the brakes off, run the engine to medium speed and turn off the ignition, immediately closing the throttle. This builds up a vacuum in the system. Wait one or two minutes, then try the brake action with the engine still switched off. If not vacuum assisted for two or three operations, the servo check valve is faulty. If servo assistance is weak, the air filter in the unit may be clogged, preventing outside air from entering the unit at the proper rate. The air filter is shown at 19 in **FIG 11:20** and is accessible after removing dust boot 22.

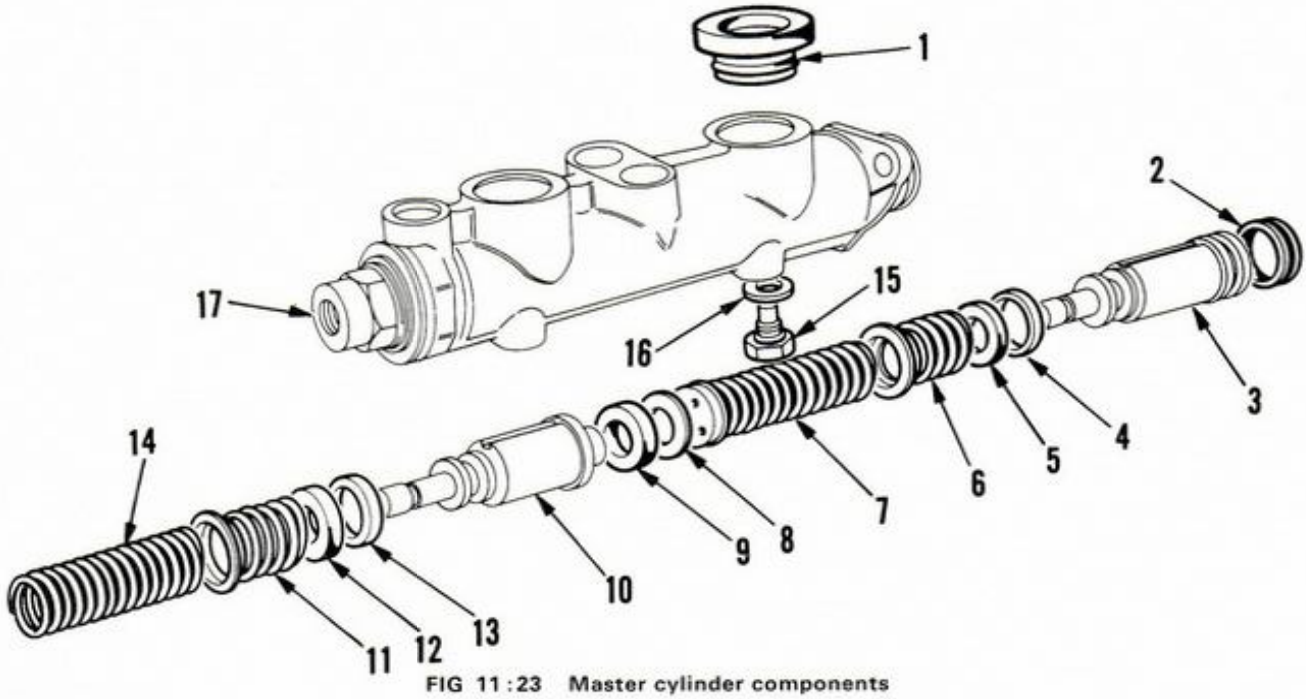

FIG 11:23 Master cylinder components

Key to Fig 11:23 1 Connector 2 Seal 3 Rear piston 4 Spacer 5 Seal 6, 7 Springs and cups 8 Flat washer 9 Seal 10 Front piston 11 Spring and cup 12 Seal 13 Spacer 14 Spring and cup 15 Plug 16 Seal 17 Master cylinder body

If the vacuum servo unit is faulty or inoperative, remedial work should be carried out at a fully equipped service station.

Failure of the servo unit does not impair the efficiency of the brakes, but greater pedal pressure will be needed to stop the car.

11 : 8 Bleeding the brakes

This is not routine maintenance and is only necessary if air has entered the hydraulic system due to parts being dismantled, or because the level in the master cylinder reservoir has dropped too low. The need for bleeding is indicated by a spongy feeling at the brake pedal, accompanied by poor braking performance. **Do not bleed the brakes with any friction pad, caliper, brake shoe or brake drum removed.** If the car is raised for access to the underside, the rear end must be supported on floor stands placed beneath the rear axle, or the rear wheels driven on to ramps. If the rear suspension is allowed to hang free, the brake regulator will operate to cut off fluid supply to the rear brakes (see **Section 11 : 5**). The engine must be switched off and the brake pedal pumped several times to clear all vacuum from the servo.

Bleed the rear brake furthest from the master cylinder first, followed by the second rear brake. Follow this by bleeding the front brake furthest from the master cylinder then the second front brake.

Remove the cap and top up the reservoir to the correct level with approved brake fluid. Clean dirt from around the appropriate bleed screw and remove the dust cap. Fit a length of rubber or plastic tube to the bleed screw as shown in **FIG 11 : 24** and lead the free end of the tube into a clean glass jar containing a small amount of brake fluid. The end of the tube must remain immersed in the fluid during the bleeding operation. Front brake caliper bleed screws are shown at 8 in **FIG 11 : 8**, those for rear drum brakes being shown at 3 in **FIG 11 : 13**.

Unscrew the bleed screw about half a turn and have an assistant depress the brake pedal fully then allow it to return. Fluid will be pumped into the jar. Continue pumping the pedal in this manner until no air bubbles can be seen in the fluid flowing into the jar. Always let the pedal rest for three seconds after being allowed to return, to allow the master cylinder to refill with fluid from the reservoir. When no more air bubbles can be seen, hold the pedal against the floor on a down stroke while the bleed valve is tightened. **Do not overtighten.**

During all bleeding operations, check the level of fluid in the reservoir at frequent intervals, topping up as needed. If the level drops too low, air will enter the system and the operation will have to be restarted.

Remove the bleed tube, refit the dust cap and repeat the operation on the other brakes in turn.

On completion, top up the fluid in the reservoir to the correct level. Discard all used fluid. Always store brake fluid in clean, sealed containers to avoid air or moisture contamination.

11 : 9 The handbrake

The front handbrake cable connects between the handbrake lever in the car and the compensator assembly beneath the rear of the car (see **FIG 11 : 25**). The rear cable is looped around the compensator pulley and passes through two outer covers one for each rear wheel.

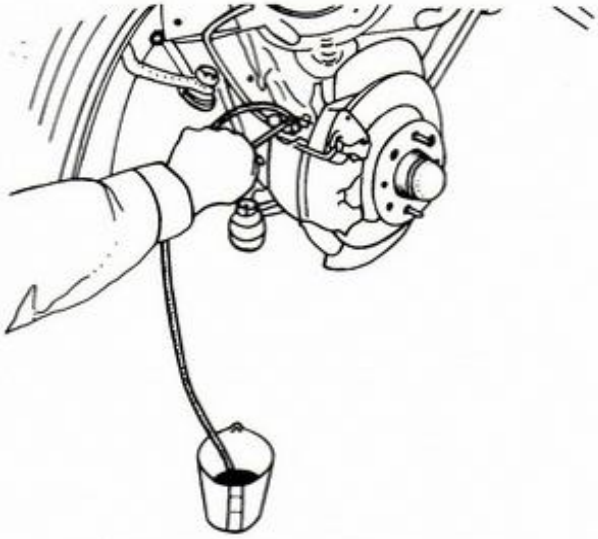

FIG 11 : 24 Bleeding the braking system

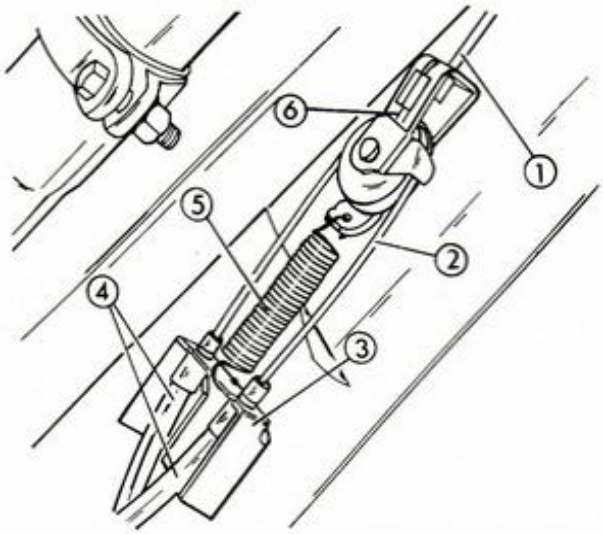

FIG 11 : 25 Handbrake compensator mechanism

Key to Fig 11 : 25 1 Front cable 2 Rear cable 3 Support bracket 4 Outer covers 5 Return spring 6 Pulley and bracket

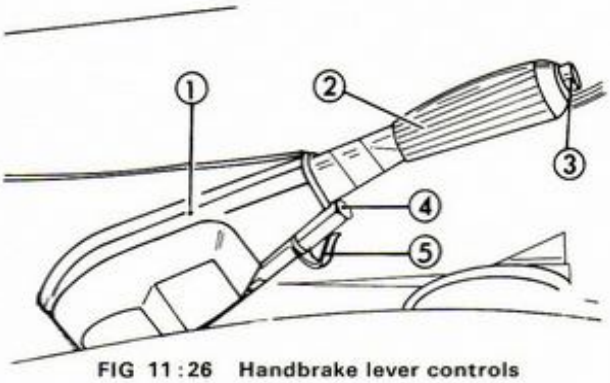

FIG 11 : 26 Handbrake lever controls

Key to Fig 11 : 26 1 Cover 2 Lever 3 Release button 4 Adjustment nut 5 Spring

Handbrake cable adjustment:

Normally, handbrake adjustment is taken up automatically by the rear brake self-adjusting mechanism. If handbrake lever travel is excessive or the handbrake operates inefficiently, check that the handbrake levers on the rear brakes are returning fully and moving freely and check that the handbrake cables and linkage are not binding or defective. **Under no circumstances may the handbrake linkage adjustment be used to adjust the rear brakes.** If no faults are found, excessive handbrake lever movement will be caused by cable stretch. Raise and safely support the rear of the car so that the road wheels are clear of the ground. Pump the footbrake pedal hard several times to make sure that the rear brakes are fully adjusted.

Apply the handbrake by three notches from the fully-off position. Refer to **FIG 11 : 26**. Ease the spring clip 5 away from adjustment nut 4, then tighten the adjustment nut until the rear wheels are just locked against rotation by hand. Make adjustments a little at a time, checking the pressure needed to turn the rear wheels after each adjustment. Operate the handbrake lever several times and check that the rear wheels are still locked with the handbrake applied by three notches. Now release the handbrake fully and check that the rear wheels are free to rotate. If one or both rear wheels are locked against rotation with the handbrake released, or if there is any binding, check the handbrake cables and compensator assembly for free movement, cleaning and lubricating as necessary. If the wheels are not locked against rotation with the handbrake applied by three notches, or if there is any binding when the lever is released, readjust the linkage to obtain the correct conditions. On completion, make sure that the spring clip is bearing against one of the flats on the adjuster nut to lock the nut against rotation.

11 : 10 Fault diagnosis

(a) Spongy pedal

1 Leak in the system
2 Worn master cylinder
3 Leaking wheel or caliper cylinders
4 Air in the fluid system
5 Gaps between brake shoes and underside of linings

(b) Excessive pedal movement

1 Check 1 and 4 in (a)
2 Excessive lining or pad wear
3 Very low fluid level in supply reservoir
4 Rear brake self-adjustment mechanism faulty

(c) Brakes grab or pull to one side

1 Distorted discs or drums
2 Wet or oily pads or linings
3 Loose caliper or backplate
4 Disc or hub loose
5 Worn suspension or steering connections
6 Mixed friction linings of different grades
7 Uneven tyre pressures
8 Broken shoe return springs
9 Seized handbrake cable
10 Seized wheel cylinder or caliper piston

(d) Brakes partly or fully locked on

1 Swollen pads or linings
2 Damaged brake pipes preventing fluid return
3 Master cylinder compensating hole blocked
4 Master cylinder piston seized
5 Brake or pedal return spring broken
6 Dirt in the hydraulic system
7 Seized wheel cylinder or caliper piston
8 Seized drum brake self-adjustment mechanism
9 Seized handbrake mechanism or cable

(e) Brake failure

1 Empty fluid reservoir
2 Broken hydraulic pipeline
3 Ruptured master cylinder seal
4 Ruptured wheel cylinder or caliper seal

(f) Reservoir empties too quickly

1 Leaks in pipelines
2 Deteriorated cylinder seals

(g) Pedal yields under continuous pressure

1 Faulty master cylinder seals
2 Faulty wheel cylinder or caliper seal
3 Leak in brake pipe or hose

CHAPTER 12

THE ELECTRICAL SYSTEM

12:1 Description
12:2 The battery
12:3 The alternator
12:4 The starter motor
12:5 The fuses
12:6 Headlamps
12:7 Lighting circuits
12:8 Fault diagnosis

12:1 Description

All models covered by this manual have 12-volt electrical systems in which the negative terminal of the battery is earthed to the car bodywork.

There are wiring diagrams in **Technical Data** at the end of this manual which will enable those with electrical experience to trace and correct faults.

Instructions for servicing the items of electrical equipment are given in this chapter, but it must be pointed out that it is not sensible to try to repair units which are seriously defective, electrically or mechanically. Such faulty equipment should be replaced by new or reconditioned units.

12:2 The battery

To maintain the performance of the battery, it is essential to carry out the following operations, particularly in winter when heavy current demands must be met.

Keep the top and surrounding parts of the battery dry and clean, as dampness can cause current leakage. Clean off corrosion from the metal part of the battery mounting with diluted ammonia and coat them with anti-sulphuric paint. Clean the terminal posts and smear them with petroleum jelly, tightening the terminal clamps securely. High electrical resistance due to corrosion at the battery terminals can be responsible for a lack of sufficient current to operate the starter motor.

Regularly remove the screw caps from the battery and check the electrolyte level in each cell, topping up with distilled water if necessary to the level of the marker provided in each cell.

If a battery fault is suspected, test the condition of the cells with a hydrometer. Never add neat acid to the battery. If it is necessary to prepare new electrolyte due to loss or spillage, add sulphuric acid to distilled water. It is highly dangerous to add water to acid. It is safest to have the battery refilled with electrolyte if it is necessary by a service station.

The indications from the hydrometer readings of the specific gravity are as follows:

For climates below 27°C or 80°F	*Specific gravity*
Cell fully charged	1.270 to 1.290
Cell half discharged	1.190 to 1.210
Cell discharged	1.110 to 1.130
For climates above 27°C or 80°F	
Cell fully charged	1.210 to 1.230
Cell half discharged	1.130 to 1.150
Cell discharged	1.050 to 1.070

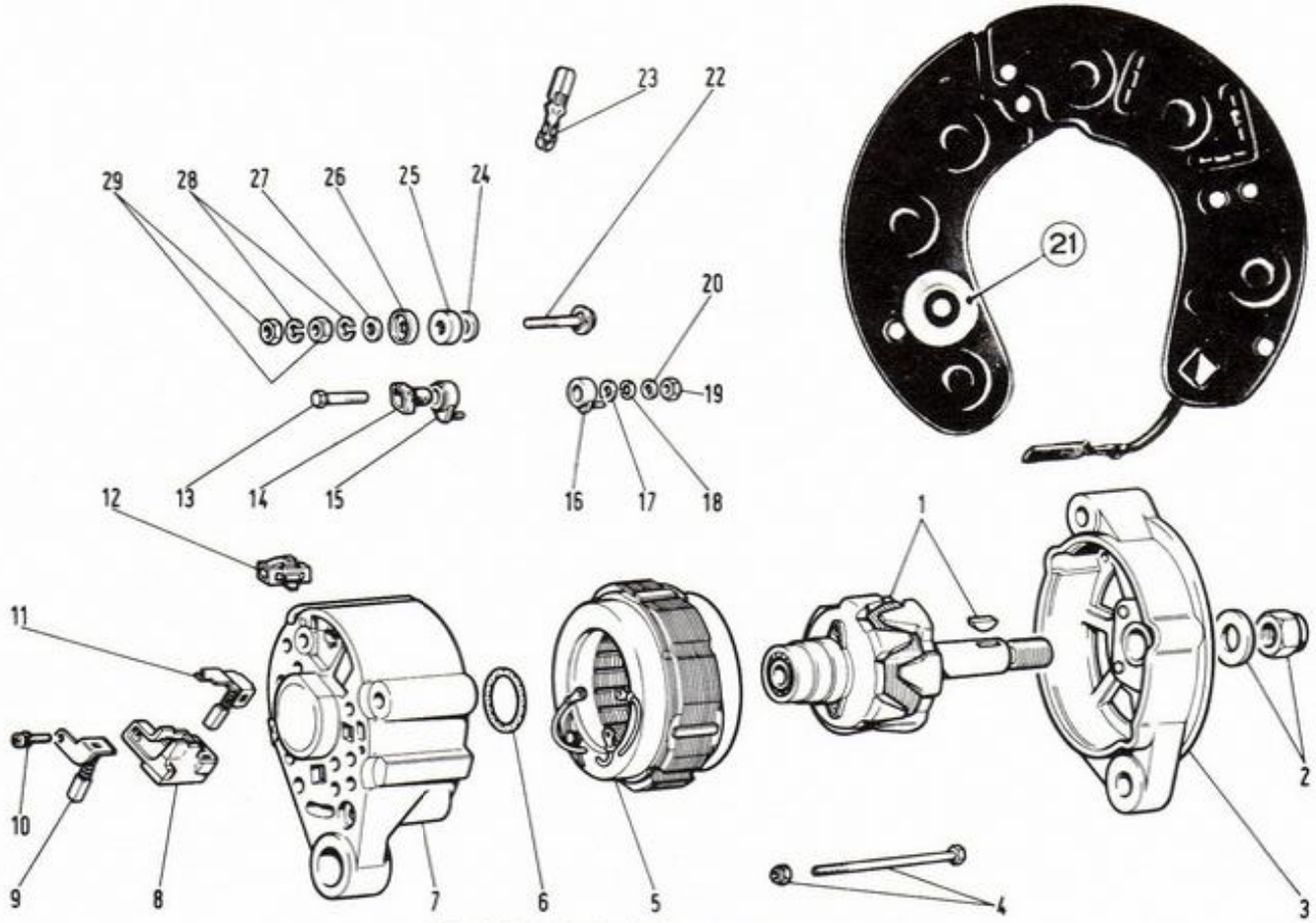

FIG 12:1 Typical alternator components

Key to Fig 12:1 1 Rotor and key 2 Nut and lockwasher 3 Drive end bracket 4 Bolt and nut 5 Stator 6 Seal 7 Diode end frame 8 Brush holder 9 Negative brush 10 Screw 11 Positive brush 12 Connector 13 Bolt 14, 15, 16 Isolators 17 Washer 18 Lockwasher 19 Nut 20 Washer 21 Diode support 22, 23 Terminals 24 Washer 25, 26 Isolators 27 Washer 28 Lockwasher 29 Nut

These figures assume electrolyte temperature of 60°F or 16°C. If the temperature of the electrolyte exceeds this, add 0.002 to the readings for each 5°F or 3°C rise. Subtract 0.002 for any corresponding drop below 60°F or 16°C.

If the battery is in a low state of charge, take the car for a long daylight run or put the battery on a charger at 5 amps, with the vents in place, until it gases freely. Do not use a naked light near the battery as the gas is inflammable. If the battery is to stand unused for long periods, give a refreshing charge every month. It will be ruined if it is left uncharged.

12:3 The alternator

The alternator provides current for the various items of electrical equipment and to charge the battery, the unit operating at all engine speeds. The current produced is alternate, this being rectified to direct current supply by diodes mounted in the alternator casing. Alternator drive is by belt from the crankshaft pulley. Very little maintenance is needed, apart from the occasional check on belt tension as described in this section, and on the condition and tightness of the wiring connections.

The alternator must never be run with the battery disconnected, nor must the battery cables be reversed at any time. Test connections must be carefully made, and the battery and alternator must be completely disconnected before any electric welding is carried out on any part of the car. The engine must never be started with a battery charger still connected to the battery. These warnings must be observed, other extensive damage to the alternator components, particularly the diodes, will result.

The alternator is designed and constructed to give many years of trouble-free service. If a fault should develop in the unit, it should be checked and serviced by a fully equipped service station or a reconditioned unit obtained and fitted. However, before suspecting a serious internal fault, inspect and if necessary renew the brushes as described later in this section. **FIG 12:1** shows typical alternator components.

Alternator testing:

A simple check on alternator charging can be carried out after dark by switching on the headlamps and starting the engine. If the alternator is charging, the headlamps will brighten considerably as the system

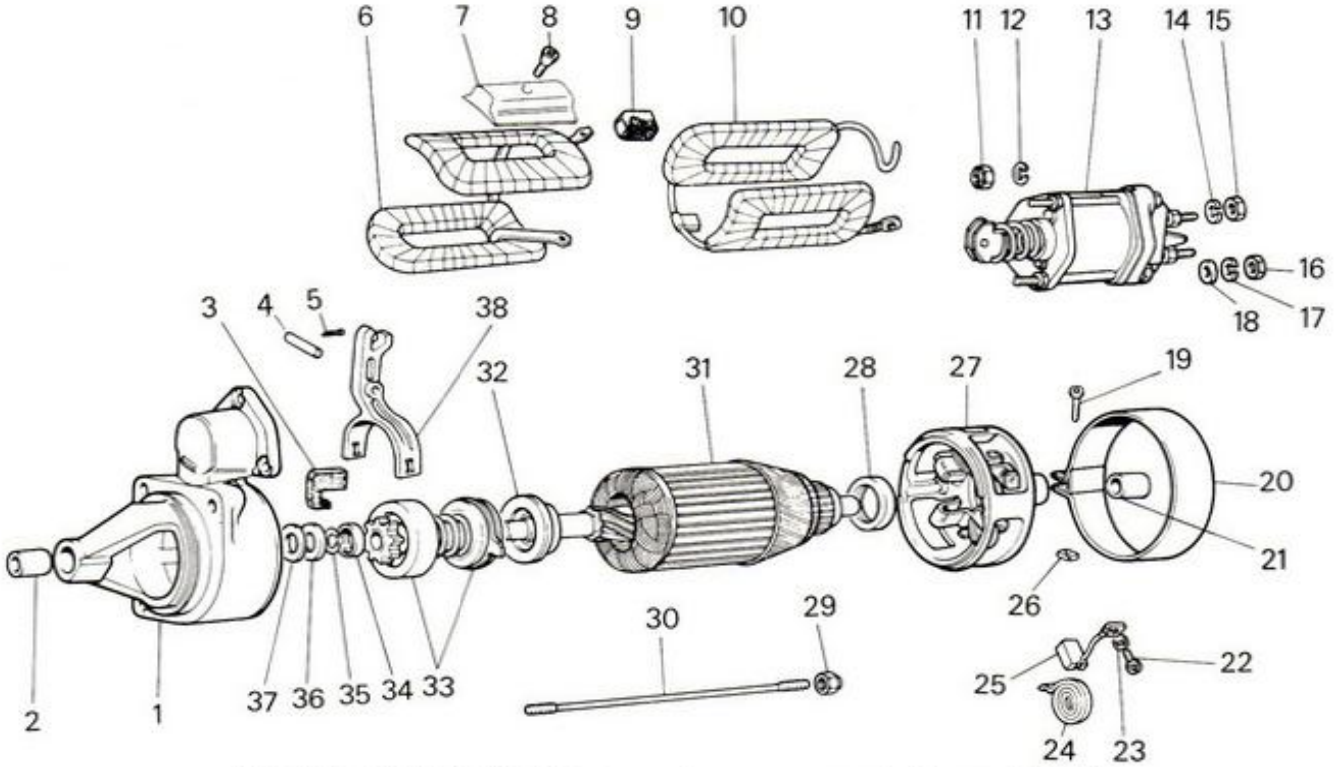

FIG 12:2 FIMM E84-0.8/12 starter motor components. For key see Fig 12:3

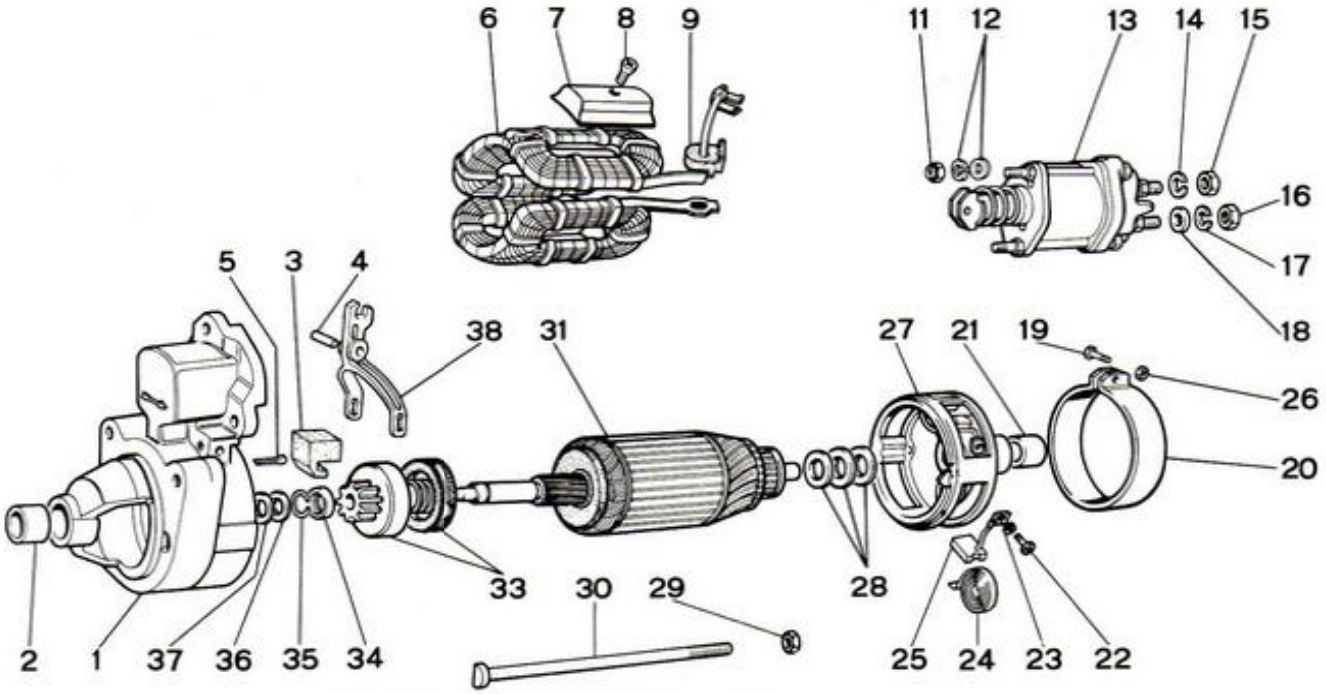

FIG 12:3 FIMM E100-1.3/12 starter motor components

Key to Figs 12:2 and 12:3 1 Starter flange and pinion housing 2 Bush 3 Rubber pad 4 Engagement lever fulcrum pin 5 Splitpin 6 Field windings 7 Pole shoe 8 Pole shoes screw 9 Rubber grommet 10 Field windings (**Fig 12:3** only) 11 Solenoid to housing securing nut 12 Spring washer 13 Starter solenoid 14 Spring washer 15 Cable securing nut 16 Field winding securing nut 17 Spring washer 18 Flat washer 19 Wrapper band screw 20 Wrapper band 21 Bush 22 Brush wire securing screw 23 Spring washer 24 Spiral spring 25 Brush 26 Nut 27 End plate and brush carrier 28 Thrust washers for adjustment of end float 29 Nut 30 Starter assembly bolt 31 Armature 32 Spacer (**Fig 12:3** only) 33 Pinion with freewheel and sliding sleeve 34 Stop ring 35 Circlip 36 and 37 Flat washers 38 Engagement lever

voltage rises from the nominal battery voltage to the higher figure produced by the alternator.

If the alternator is not charging, check the wiring and connections in the charging circuit, then check the brush gear as described later. If these are in order, the alternator unit is at fault and must be checked and repaired by a service station.

Carbon brush renewal:

This work can be carried out without the need for alternator removal. Refer to **FIG 12:1** and remove screw 10, then detach brush holder 8 and remove brushes 9 and 11. Inspect the brushes and renew both if either is damaged or worn below the wear limit of 9.5mm (0.375in).

The slip rings on rotor 1 against which the brushes operate should be cleaned with a petrol-moistened cloth. Hold the cloth through the brush holder mounting pole. To facilitate cleaning, slacken the drive belt as described in **Chapter 4**, then remove the belt from the alternator pulley so that the pulley can be turned by hand.

On completion, refit the brushes to the holder then carefully install the holder and secure with the screw.

Alternator removal:

Disconnect the battery, then disconnect the cables to the alternator. Slacken and remove the drive belt as described in **Chapter 4**. Unbolt and remove the alternator. On models fitted with air conditioning (refrigeration) equipment, the compressor drive belts must be removed first (see **Chapter 13**).

Refitting is a reversal of the removal procedure, adjusting belt tension as described in **Chapter 4**.

12:4 The starter motor

Components of the starter motor fitted to 1300 models are shown in **FIG 12:2**, those for the slightly more powerful unit fitted to larger engined models being shown in **FIG 12:3**. Apart from the detail differences evident in the illustrations, the two units are similar in design and construction, so descriptions and servicing instructions given in this section will apply to both types unless otherwise stated.

The starter is a brush type series wound motor equipped with an overrunning clutch and operated by a solenoid. The armature shaft is supported in metal bushes which require no routine servicing.

When the starter is operated from the switch, the engagement lever moves the pinion into mesh with the engine ring gear. When the pinion meshes with the ring gear teeth, the solenoid contact closes the circuit and the starter motor operates to turn the engine. When the engine starts, the speed of the rotating ring gear causes the pinion to overrun the clutch and armature. The pinion continues in engagement until the switch is released, when the engagement lever returns it to the rest position under spring pressure.

Tests for a starter which does not operate:

Check that the battery is in good condition and fully charged and that its connections are clean and tight. Switch on the headlamps and operate the starter switch. Current is reaching the starter if the lights dim when the starter is operated, in which case it will be necessary to remove the starter for servicing. If the lights do not dim significantly, switch them off and operate the starter switch while listening for a clicking sound at the starter motor which will indicate that the starter solenoid is operating.

If no sound can be heard at the starter when the switch is operated, check the wiring and connections between the battery and the starter switch, and between the switch and the solenoid. If the solenoid can be heard operating when the starter switch is operated, check the wiring and connections between the battery and the main starter motor terminal, taking care not to accidentally earth the main battery to starter motor lead which is live at all times. If the wiring is not the cause of the trouble, the fault is is internal and the starter motor must be removed and serviced.

Removing the starter:

Disconnect the earth cable from the battery. Disconnect the electrical connections from the starter motor. Remove the mounting bolts securing the starter flange, then carefully remove the starter motor.

Refitting is a reversal of the removal procedure.

Starter motor dismantling:

Refer to **FIG 12:2** or **12:3**. Free the lead of the starter motor from the lower heavy duty terminal of the solenoid by removing the nuts. Remove nuts 11 so that the solenoid can be removed, unhooking the plunger pin from the lever.

Remove brush cover 20, then carefully lift springs 24 from the ends of brushes 25, then withdraw the brushes from their holders. Remove through bolts 30, then withdraw armature 31 and dismantle the remaining components into the order shown in the illustration.

After servicing the internal components as described later, reassemble the starter in the reverse order of removal, noting the following points:

Lubricate the splines on the starter drive assembly with a thin coating of engine oil and the face of stop ring 34 with lithium-based grease.

Brush gear:

The starter motor shown in **FIG 12:2** is fitted with two carbon brushes, that shown in **FIG 12:3** being fitted with four carbon brushes.

Check the brushes for wear and renew them if they are excessively worn or contaminated. If a brush sticks in its holder, polish the sides of the brush with a fine file and clean the brush holder with a piece of rag moistened with petrol or methylated spirits.

The commutator, against which the brushes operate, should have a smooth polished surface which is dark in appearance. Wiping over with a piece of cloth moistened with petrol or methylated spirits will be sufficient cleaning. Light burn marks or scores can be polished off with fine grade glasspaper. **Never use emerycloth as this leaves particles embedded in the copper.** Deeper damage may be skimmed off in a lathe, at high speed and using a very sharp tool. A diamond-tipped tool should be used for a light final cut.

Starter drive:

The armature and starter drive assembly is shown in **FIG 12:4** or **12:5**. To remove the starter drive, use a suitable piece of metal tube to drive the stop ring away from the circlip. Remove the circlip, then pull the stop ring from the end of the shaft. Remove the starter drive.

Light damage to the pinion teeth can be cleaned off with a fine file or oilstone, but deeper damage necessitates renewal of the complete drive assembly.

Check that the overrunning clutch takes up drive instantaneously in one direction, but slips freely in the opposite direction. Again, the complete drive assembly must be renewed if the clutch is defective.

The armature:

Check the armature for charred insulation, loose segments or laminations and for scored laminations. Shortcircuited windings may be suspected if individual commutator segments are badly burned. No repairs can be carried out to a defective armature and renewal is the only cure.

Field coils:

The field coils and pole pieces are held in place by special screws which cannot be slackened or fully tightened with an ordinary screwdriver. For this reason, renewal of the field coils should be left to a service station.

The field coils can be checked for continuity using a test lamp and battery. A better method is to check the resistance using an ohmmeter. The resistance can also be checked using a 12-volt battery and ammeter (voltage divided by current equals resistance).

Bearings:

If the bearing bushes are excessively worn, they should be renewed by a service station, as press equipment and very accurate mandrels are required to install the new bushes.

Insulation and cleaning:

Blow away all loose dust and dirt with an air-line. Use a small brush to clean out crevices. Petrol or methylated spirits may be used to help in cleaning the metal parts, but the field coils, armature and drive assembly must under no circumstances be soaked with solvent.

The insulation can be checked using a suitable test lamp and 12-volt battery, though a better check will be to use a neon bulb and 110 AC volt supply. In neither case should the bulb light when connected across the insulations.

12:5 The fuses

On early models, six 8 amp and seven 16 amp fuses are fitted in a fuse box mounted below the facia on the right-hand side. From May 1978, eight 8 amp and six 16 amp fuses are used. There are four (two 8 amp and two 16 amp) spare fuses. The circuits protected by each fuse are indicated on the plastic cover on the fuse box.

If a fuse blows, briefly check the circuit that it protects and install a new fuse. Check each circuit in turn and if the new fuse does not blow, it is likely that the old one had weakened with age. If the new fuse blows, carefully check the circuit that was live at the time and do not fit another fuse until the fault has been found and repaired. A fuse that blows intermittently will make it more difficult to correct the fault, but try shaking the wiring loom, as the fault is likely to be caused by chafed insulation making intermittent contact with engine vibration or road shocks.

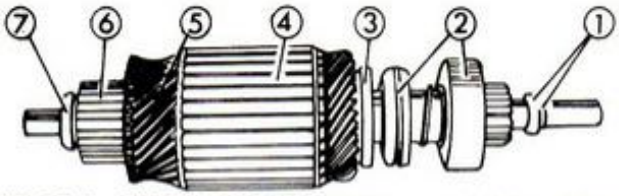

FIG 12:4 FIMM E84-0.8/12 armature and drive pinion assembly

Key to Fig 12:4 1 Circlip and stop ring 2 Pinion and clutch assembly 3 Spacer 4 Armature 5 Armature winding 6 Commutator 7 Thrust plate

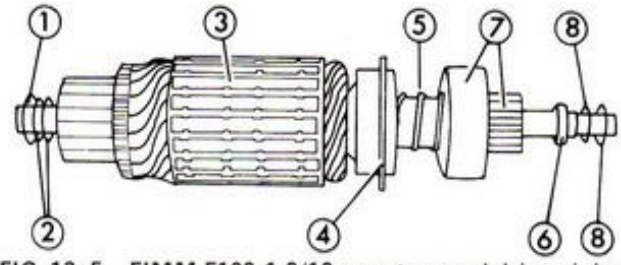

FIG 12:5 FIMM E100-1.3/12 armature and drive pinion assembly

Key to Fig 12:5 1 Fibre washer 2 Flat washers 3 Armature 4 Sliding sleeve 5 Thrust spring 6 Circlip and stop ring 7 Drive pinion assembly 8 Flat washers

Never fit a fuse of higher rating than that specified, and never use anything as a substitute for a fuse of the correct type. The fuse is designed to be the weak link in the circuit and if a higher rated fuse or an incorrect substitute is installed the wiring may fail instead, perhaps causing a fire.

The fuse box also houses some of the relays used in the electrical circuits, others are mounted in the engine compartment. The relays are easily removed, if renewal becomes necessary by pulling them out from their bases.

12:6 Headlamps

Headlamp beam setting:

The headlamp beam angles are adjusted by means of horizontal and vertical adjustment screws provided at each headlamp unit.

Headlamp main beams should be set so that, when the car is normally loaded the main beams are parallel to each other and to the road. The dipped beams should be set so that they provide a good spread of light to the front and nearside of the car without dazzling oncoming drivers. Accurate beam setting is best left to a service station having special optical equipment.

Headlamp units:

Access to the headlamp bulbs is from inside the engine compartment. On early models a cover shield must be lifted first. For all models, detach the wiring connector and the rubber boot. To free the bulb, press in and rotate the retaining ring anticlockwise.

Early models:

To renew the headlamp units, first detach the wiring connectors. Then remove the 10 screws which secure the

radiator grille to the front panel. The headlamp units are held to the back of the grille by screws and nuts.

12 : 7 Lighting circuits

Front and rear lamp clusters :

To renew a side, direction indicator, stop or reverse lamp bulb, detach the appropriate lens assembly by removing the securing screws. All the bulbs are of the bayonet type fixing.

The front side and direction indicator lamp assemblies are bolted to the front bumper (see **Chapter 13**). Rear lamp clusters are bolted to the rear panel from inside the boot.

Lamps give insufficient light :

Refer to **Section 12 : 2** and check the condition of the battery, recharging it if necessary. Have the setting of headlamp beams checked as described in **Section 12 : 6**. Make sure that the lamp lenses are clean and renew any lamp units or bulbs which have darkened with age.

Bulbs burn out frequently :

Have the alternator regulator setting checked by a service station.

Lamps light when switched on but gradually fade :

Refer to **Section 12 : 2** and check the battery, as it is not capable of supplying current for any length of time. If the fault persists, the alternator should be checked as described in **Section 12 : 3**.

Lamp brilliance varies with the speed of the car :

Check the condition of the battery and its connections. Make sure that the connections are clean and tight and renew any faulty cables.

Instrument panel :

To remove the panel on early models. First, detach the radio/blanking plate. Then remove the lefthand and righthand switch panels. Next, unscrew the two steering column cowl bolts and move the cowl towards the steering wheel. Finally, unscrew the two outer bolts securing the panel to the facia. Withdraw the panel and disconnect the wiring/plugs. Disconnect the speedometer cable by pulling on the outer ring at the end of the cable.

From May 1978, the procedure is slightly different. For square instruments detach the lefthand and righthand panel plates, for semi-circular instruments detach the surrounding frame. Remove the panel retaining screws and withdraw to disconnect the wiring and speedometer cable. Panel/warning light bulbs are of the wedge-base type, held in bayonet type holders.

To refit the panels, reverse the removal procedures.

Wiper motor :

Access to the wiper motor is from inside the engine compartment. It is mounted beneath the windscreen scuttle, on the lefthand side, behind the upper bulkhead cover panel.

12 : 8 Fault diagnosis

(a) Battery discharged

1 Terminal connections loose or dirty
2 Shorts in lighting circuits
3 Alternator not charging
4 Regulator faulty
5 Battery internally defective

(b) Insufficient charge rate

1 Check 1 and 4 in (a)
2 Drive belt slipping
3 Alternator diodes defective

(c) Battery will not hold charge

1 Low electrolyte level
2 Battery plates sulphated
3 Electrolyte leakage from cracked case
4 Battery plate separators defective

(d) Battery overcharged

1 Regulator faulty

(e) Alternator output low or nil

1 Drive belt broken or slipping
2 Regulator faulty
3 Brushes sticking, springs weak or broken
4 Defective internal windings
5 Defective diodes

(f) Starter motor lacks power or will not turn

1 Battery discharged, loose cable connections
2 Starter switch or solenoid faulty
3 Brushes worn or sticking, leads detached or shorting
4 Commutator dirty or worn
5 Starter shaft bent
6 Engine abnormally stiff, perhaps due to rebore

(g) Starter runs but will not turn engine

1 Pinion engagement mechanism faulty
2 Broken teeth on pinion or flywheel gears

(h) Noisy starter when engine is running

1 Pinion return mechanism faulty

(j) Starter motor inoperative

1 Check 1 and 4 in (f)
2 Armature or field coils faulty
3 Solenoid faulty

(k) Starter motor rough or noisy

1 Mounting bolts loose
2 Pinion engagement mechanism faulty
3 Damaged pinion or flywheel teeth

(l) Lamps inoperative or erratic

1 Battery low, bulbs burned out
2 Faulty earthing of lamps or battery
3 Lighting switch faulty, loose or broken connections

(m) Wiper motor sluggish, taking high current

1 Wiper motor defective internally
2 Lack of lubrication
3 Linkage worn or binding
4 Wiper motor fixings loose

(n) Wiper motor runs but does not drive arms

1 Wiper linkage faulty
2 Wiper transmission components worn or damaged

(o) Gauges do not work

1 Check wiring for continuity
2 Check instruments and transmitters for continuity

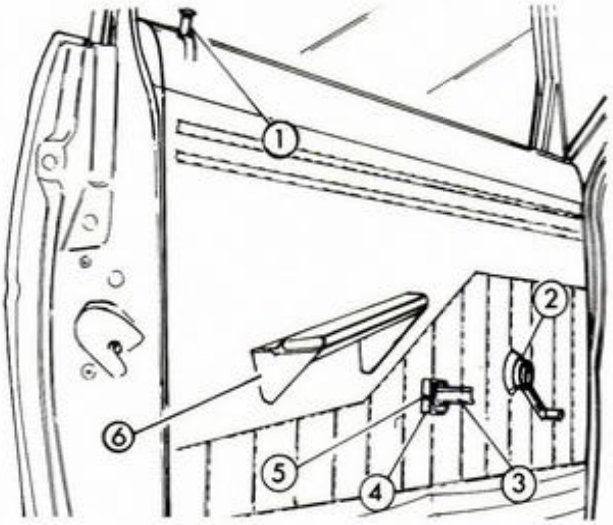

FIG 13:1 Trim panel removal

light circular motion. Leave the paint to harden for a period of weeks rather than days before applying wax polish.

13:2 Maintenance

Regular washing and waxing not only improves the appearance of the car but it also preserves the finish. Washing removes the industrial grime which would otherwise etch and damage the paintwork, while waxing fills the pores and prevents moisture and dirt from creeping under the paint to attack the metal. Chrome finish also benefits, for the same reasons, from regular waxing.

When washing the car it is equally important to wash the underside. Use a fine spray from a hose to soften salt and mud deposits then remove them with a high pressure jet. Special compounds are available for spraying on the underside of the vehicle to protect it from salt and grit, the best time to apply these being at the beginning of winter. Care must be taken to protect the brake units and flexible hoses from any underbody treatments.

Lubrication:

This should be carried out at regular intervals. The door lock barrels should be lubricated with a little powdered graphite, blown in through the key slot. Door hinges, seat mountings and pivots, and all locks and stays should be lubricated with engine oil. The bonnet catch and luggage compartment lid or tailgate lock should be lubricated with petroleum jelly. The seat runners should be lubricated with grease. Avoid excessive lubrication which could cause the staining of clothes or upholstery.

13:3 Door components

For access for door internal components, it is first necessary to remove the trim panel. The items to be detached are shown in **FIG 13:1**. Unscrew and remove

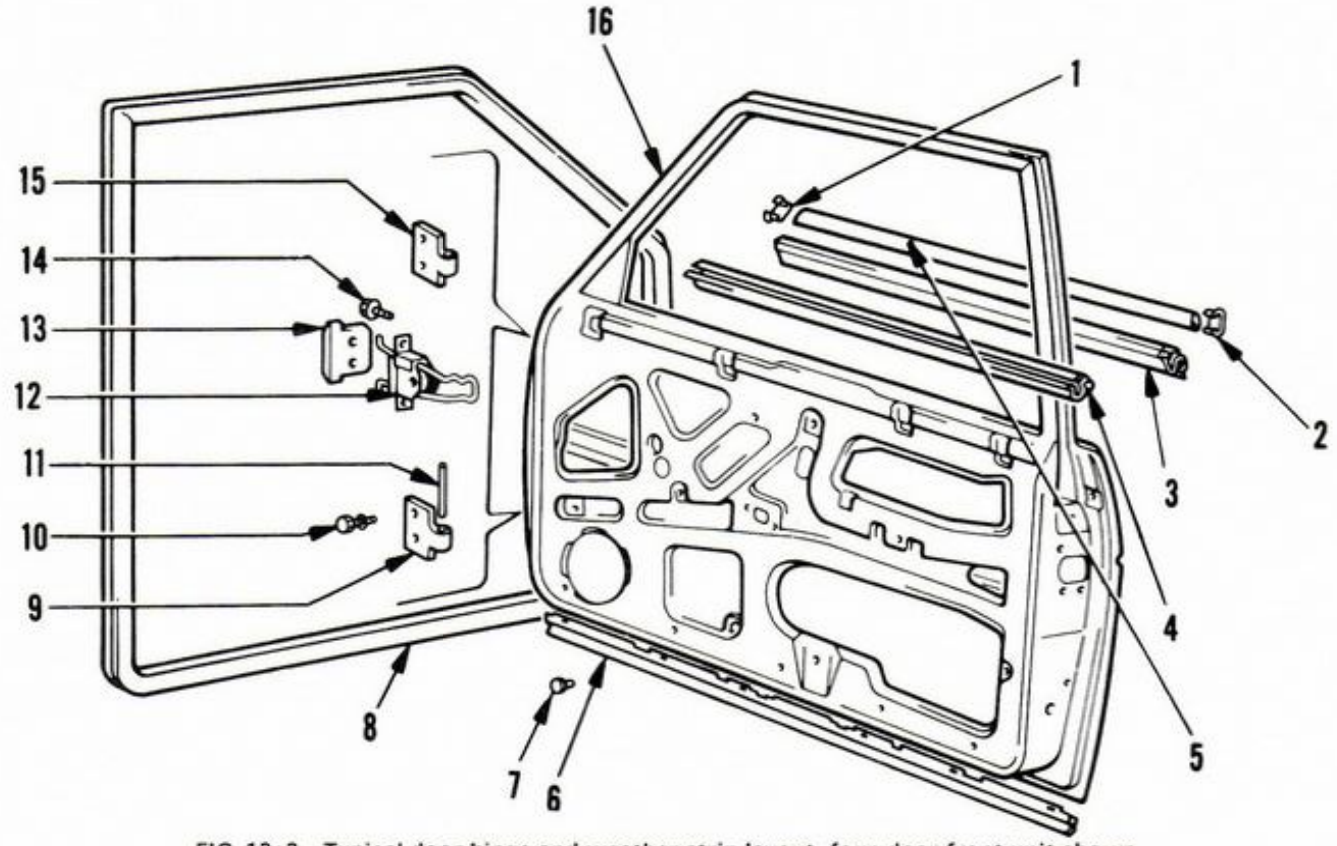

FIG 13:2 Typical door hinge and weather strip layout, four-door front unit shown

Key to Fig 13:2 1, 2 Clips 3, 4 Weather strips 5 Channel 6 Weather strip 7 Clip 8 Weather strip 9 Hinge 10 Bolt and washer 11 Hinge pin 12 Door check 13 Check hinge 14 Bolt and washer 15 Hinge 16 Door panel

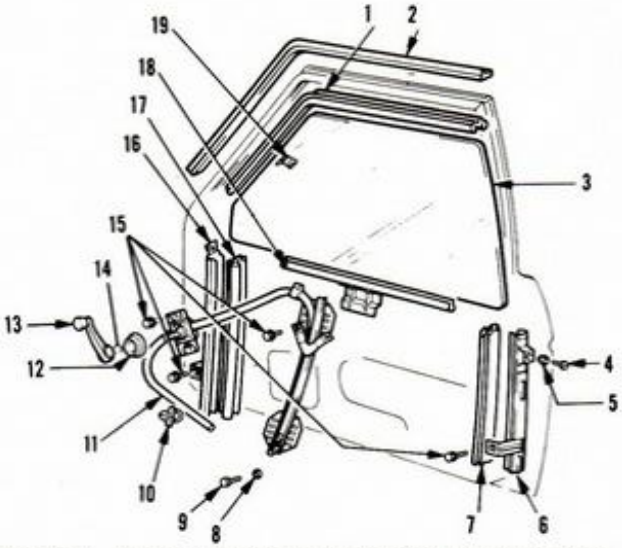

FIG 13:3 Front door internal components, four-door model

Key to Fig 13:3 1, 2 Weather strips 3 Sliding glass 4 Screw 5 Washer 6 Channel 7 Weather strip 8 Washer 9 Bolt 10 Clamp 11 Regulator assembly 12 Escutcheon 13 Regulator handle 14 Clip 15 Bolts 16 Channel 17 Weather strip 18 Lift channel 19 Clip

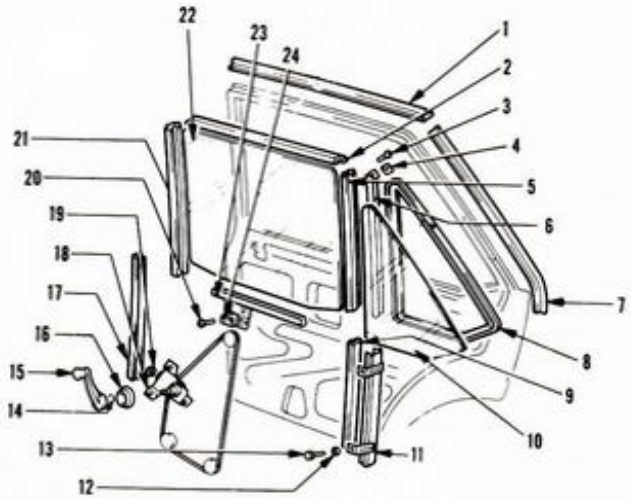

FIG 13:4 Rear door internal components, four-door model

Key to Fig 13:4 1, 2 Weather strips 3 Screw 4 Boot 5 Weather strip 6 Pillar 7, 8, 9 Weather strips 10 Quarter light glass 11 Channel 12 Washer 13 Screw 14 Clip 15 Handle 16 Escutcheon 17 Channel 18 Regulator assembly 19 Nut 20 Screw 21 Weather strip 22 Sliding glass 23 Lift channel 24 Clip

lock button 1. Fit the blade of a small screwdriver into slot 5, then lever off the door handle trim 4. Remove window regulator handle 2 by levering the escutcheon away from the trim panel, then pressing off the spring clip which retains the handle to the shaft. Remove the armrest, if fitted, by taking out the two fixing screws. Carefully lever the trim panel away from the door to release the spring clips, using a suitable flat-bladed tool.

Door internal components for the various models are shown in **FIGS 13:2** to **13:7**.

In order to remove door glass, the lower window guide channels must be loosened by slackening their fixing bolts. If the sliding glass is supplemented by a quarter light, as is the case on two-door models or the rear doors of four-door models, the quarter light glass must be detached before the sliding glass can be removed. On some models, access must be gained to the lower quarter light mounting by removing the upper trim strip from the door. To do this, the rivets securing the trim must be drilled out as shown in **FIG 13:8**. When all work is complete, new pop rivets must be used to secure the trim to the door panel. Window regulator assembly can be removed from the door after detaching the sliding glass lifting channel from the regulator mechanism. Remove the bolts securing the regulator assembly to the door panel, then remove the assembly through the panel aperture.

Lock mechanisms can be removed by taking out the securing screws in the edge of the door panel, then turning the latch and pushing the lock assembly into the door panel. Detach the operating rods from the levers on the lock assembly, then withdraw the lock assembly from the door panel. After installing a door lock, always check that the operation is correct before shutting the door.

If a door does not fit correctly in the body aperture, it can be moved slightly on its hinges. Scribe around the hinges so that they can be realigned in their original positions if necessary, then slacken the bolts securing the hinges to the body panels. Move the door a little as necessary within the limits allowed by the hinge fixings, then tighten the bolts securely. If a door does not shut correctly, the position of the striker plate can be adjusted a little to compensate. Scribe around the striker plate so that it can be realigned in its original position if necessary.

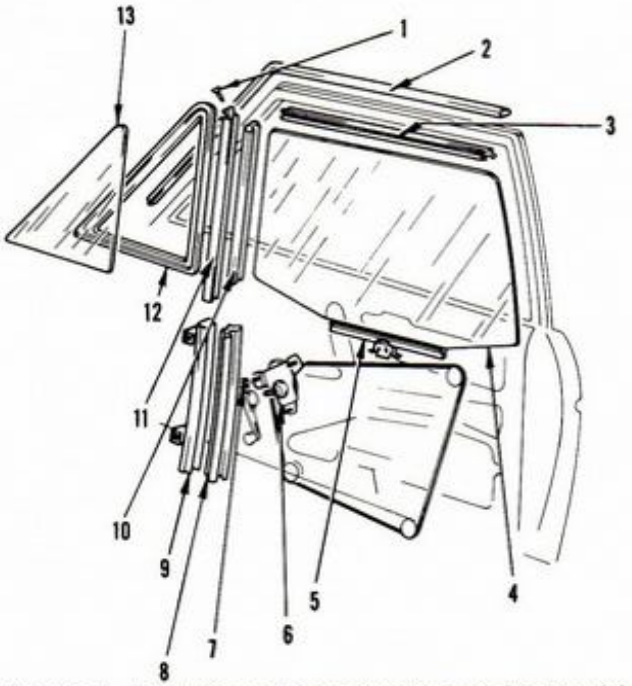

FIG 13:5 Door internal components, two-door model

Key to Fig 13:5 1 Screw 2, 3 Weather strips 4 Sliding glass 5 Lift channel 6 Regulator assembly 7 Nut 8 Weather strip 9 Channel 10 Weather strip 11 Pillar 12 Weather strip 13 Quarter light glass

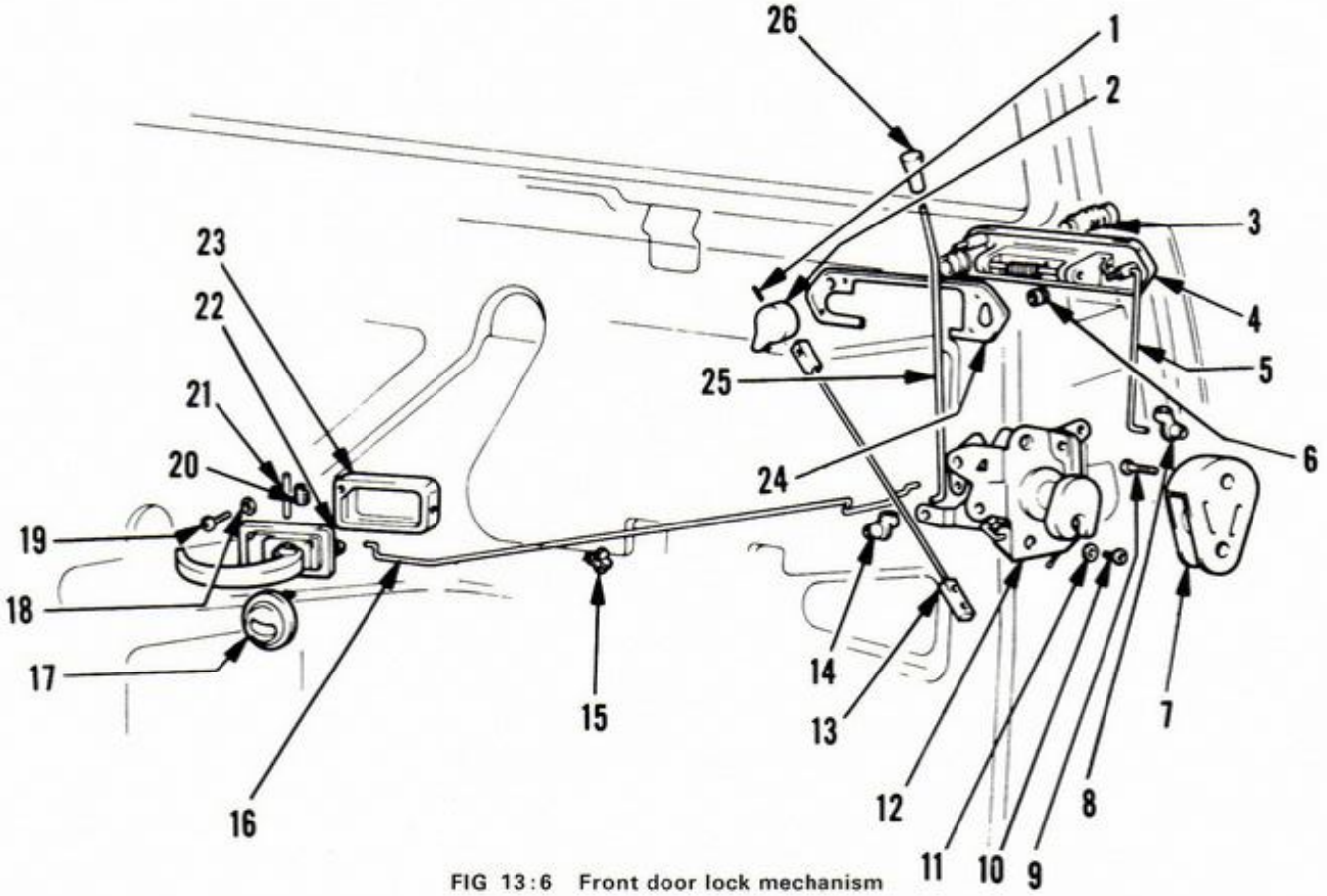

FIG 13:6 Front door lock mechanism

Key to Fig 13:6 1 Pin 2 Safety control 3 Lock cylinder 4 Outside handle 5 Link 6 Nut 7 Striker plate 8 Clip 9, 10 Screws 11 Washer 12 Latch 13 Adjustable link 14 Clip 15 Clamp 16 Link 17 Escutcheon 18 Washer 19 Screw 20 Spring 21 Shaft 22 Inside handle 23 Trim 24 Lining 25 Link 26 Lock button

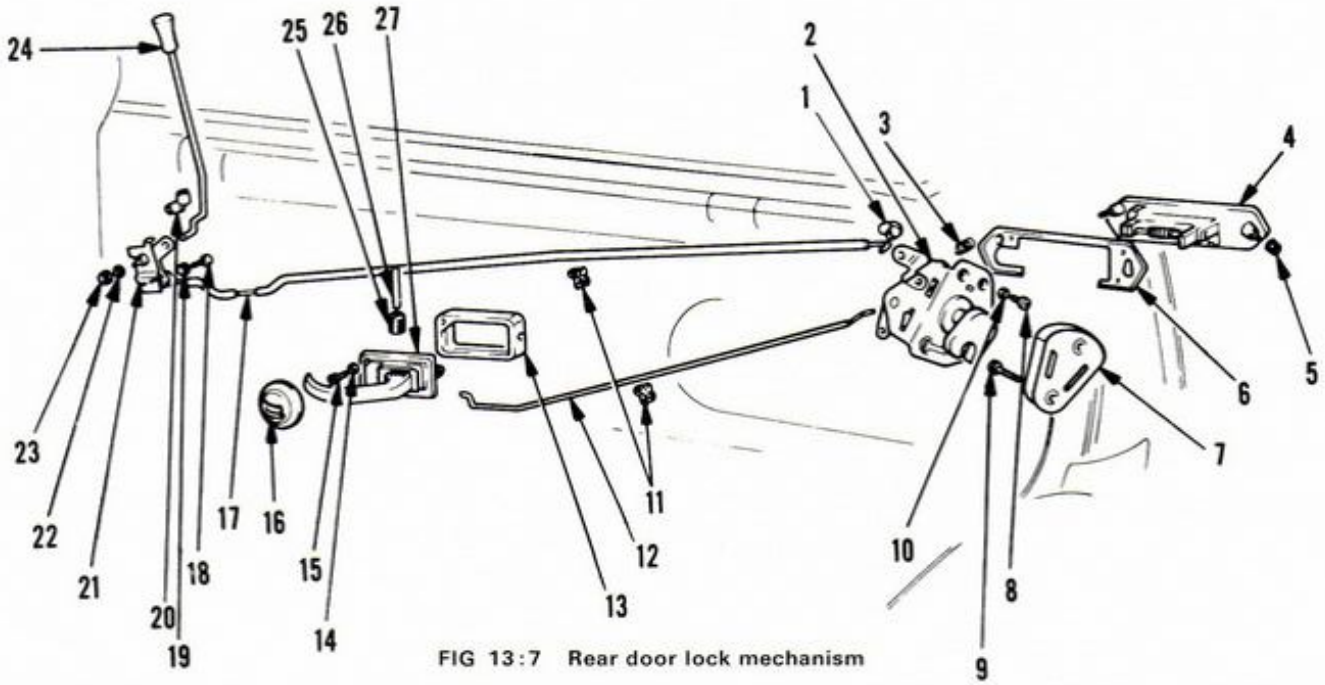

FIG 13:7 Rear door lock mechanism

Key to Fig 13:7 1 Clip 2 Lock 3 Spring 4 Handle 5 Nut 6 Lining 7 Striker plate 8, 9 Screws 10 Washer 11 Clip 12 Link 13 Lining 14 Washer 15 Screw 16 Escutcheon 17 Link 18 Screw 19 Washer 20 Clip 21 Safety control 22 Washer 23 Nut 24 Lock button 25 Spring 26 Pin 27 Inside handle

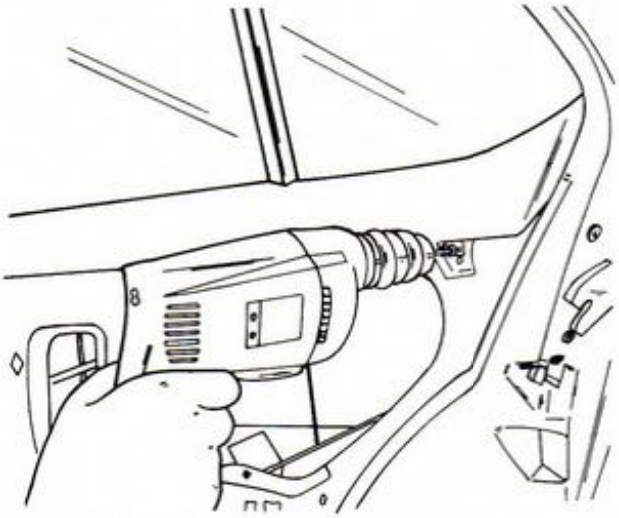

FIG 13:8 Drilling out trim securing rivets

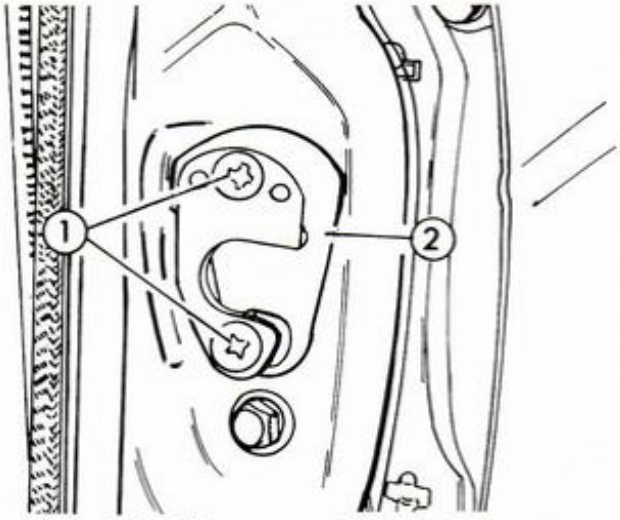

FIG 13:9 Fixing screws 1 and striker plate 2

Slacken the two screws 1 (see **FIG 13:9**), move striker plate 2 to the desired position, then firmly tighten the screws.

13:4 The bonnet

Removal:

The bonnet panel, hinges and release mechanism are shown in **FIG 13:10**. Remove retainer spring 23 from the bonnet panel. With the help of an assistant to steady the bonnet, remove the two bolts and washers 18 on each side which retain the hinges to the panel, then remove the two bolts or nuts securing the bonnet prop 1 to the car frame. Carefully lift the bonnet from the car.

Refitting:

This is a reversal of the removal procedure. On completion, check that the bonnet fits accurately in the body aperture. If the bonnet is misaligned, slacken the

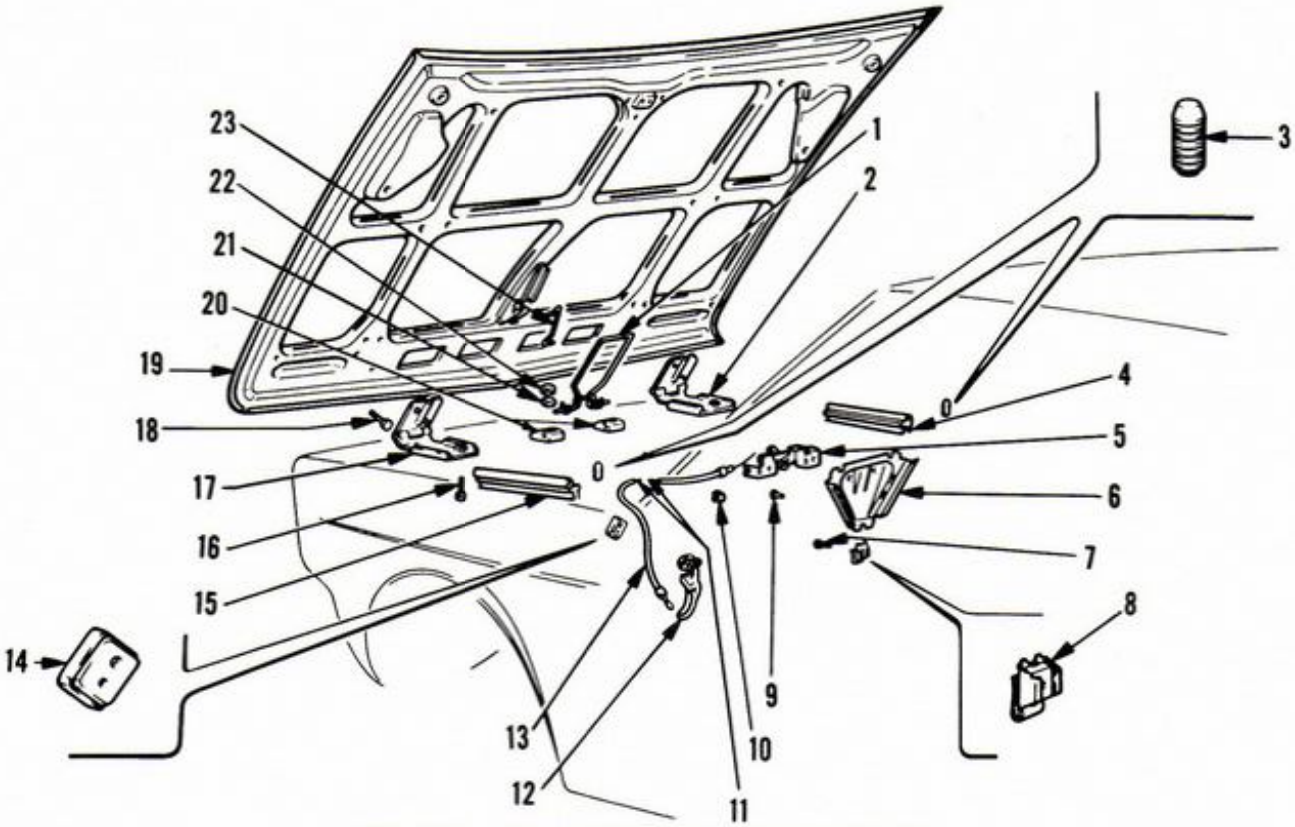

FIG 13:10 Bonnet, hinges and release mechanism

Key to Fig 13:10 1 Prop 2 Hinge 3 Pad 4 Weather strip 5 Catch 6 Plate 7 Bolt 8 Nut plate 9 Bolt 10 Clip 11 Release cable 12 Release handle 13 Sheath 14 Rubber pad 15 Weather strip 16 Bolt 17 Hinge 18 Bolt 19 Bonnet panel 20 Support 21 Lockwasher 22 Nut 23 Spring

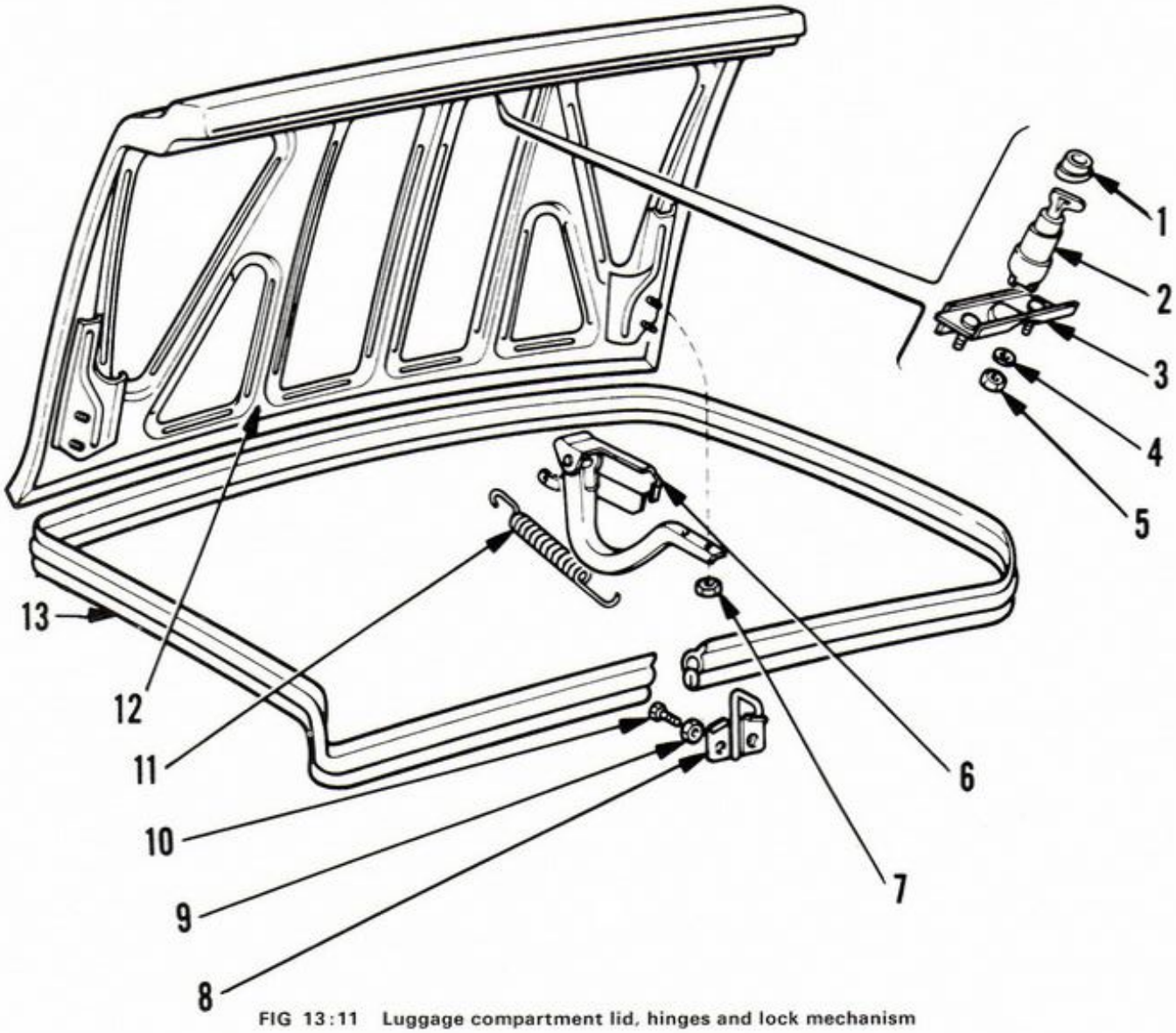

FIG 13:11 Luggage compartment lid, hinges and lock mechanism

Key to Fig 13:11 1 Lining 2 Lock cylinder 3 Mounting plate 4 Washer 5 Nut 6 Hinge 7 Nut 8 Striker plate 9 Nut 10 Screw 11 Spring 12 Lid 13 Weather strip

fixing bolts securing the hinges to the panel, then move the panel slightly as necessary before retightening the bolts.

Bonnet lock:

To remove the bonnet lock, disconnect the release cable from the lock and remove the cable from its retaining clip. Do not shut the bonnet while the release cable is disconnected. Remove the six bolts securing the lock and support bracket, then remove the assembly.

When installing the bonnet lock, make sure that the release cable is correctly connected. Check the operation of the release mechanism before shutting the bonnet. If the bonnet closes too tightly or loosely, slacken the lock securing bolts and move the lock slightly to a suitable new position before retightening the bolts.

13:5 Luggage compartment lid

Removal:

FIG 13:11 shows the luggage compartment lid, hinges and lock assembly. To remove the lid, have an assistant steady the lid while removing the two nuts and washers on each side which secure the hinge plates to the panel. Carefully lift off the lid.

Refitting:

This is a reversal of the removal procedure, realigning the panel relative to the hinge plates, if necessary, so that the lid fits squarely in the body aperture.

Lock assembly:

The lock can be detached from the luggage compartment lid after removing the two fixing nuts and washers.

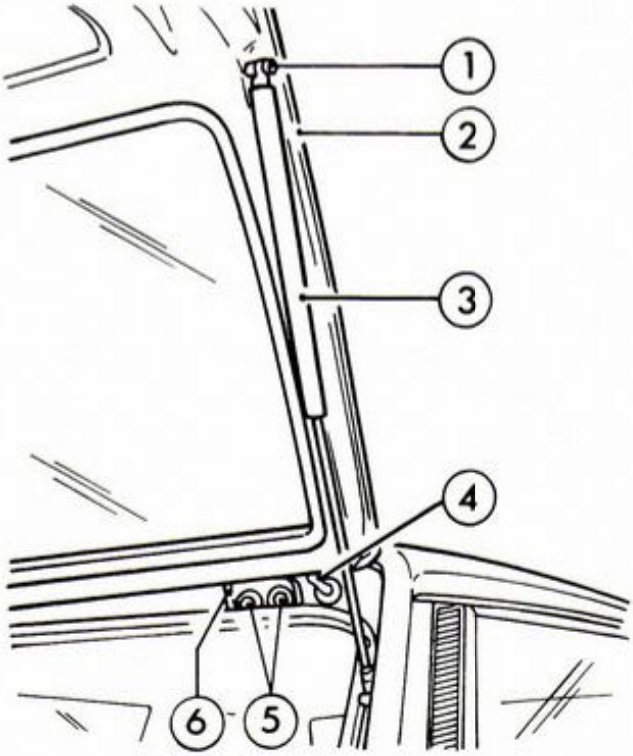

FIG 13:12 Tailgate removal

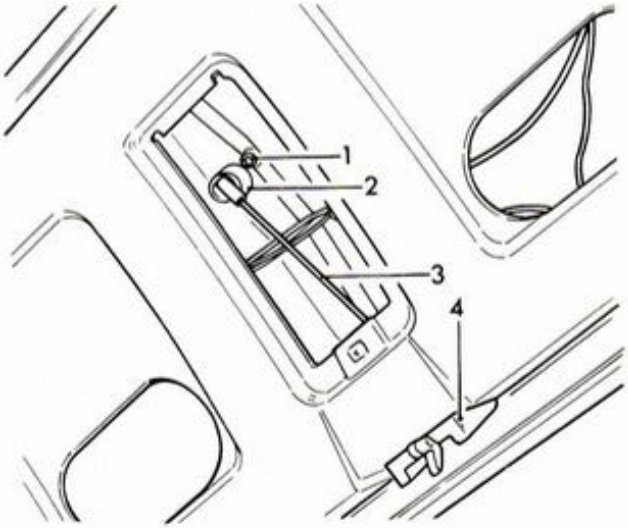

FIG 13:13 Tailgate lock removal

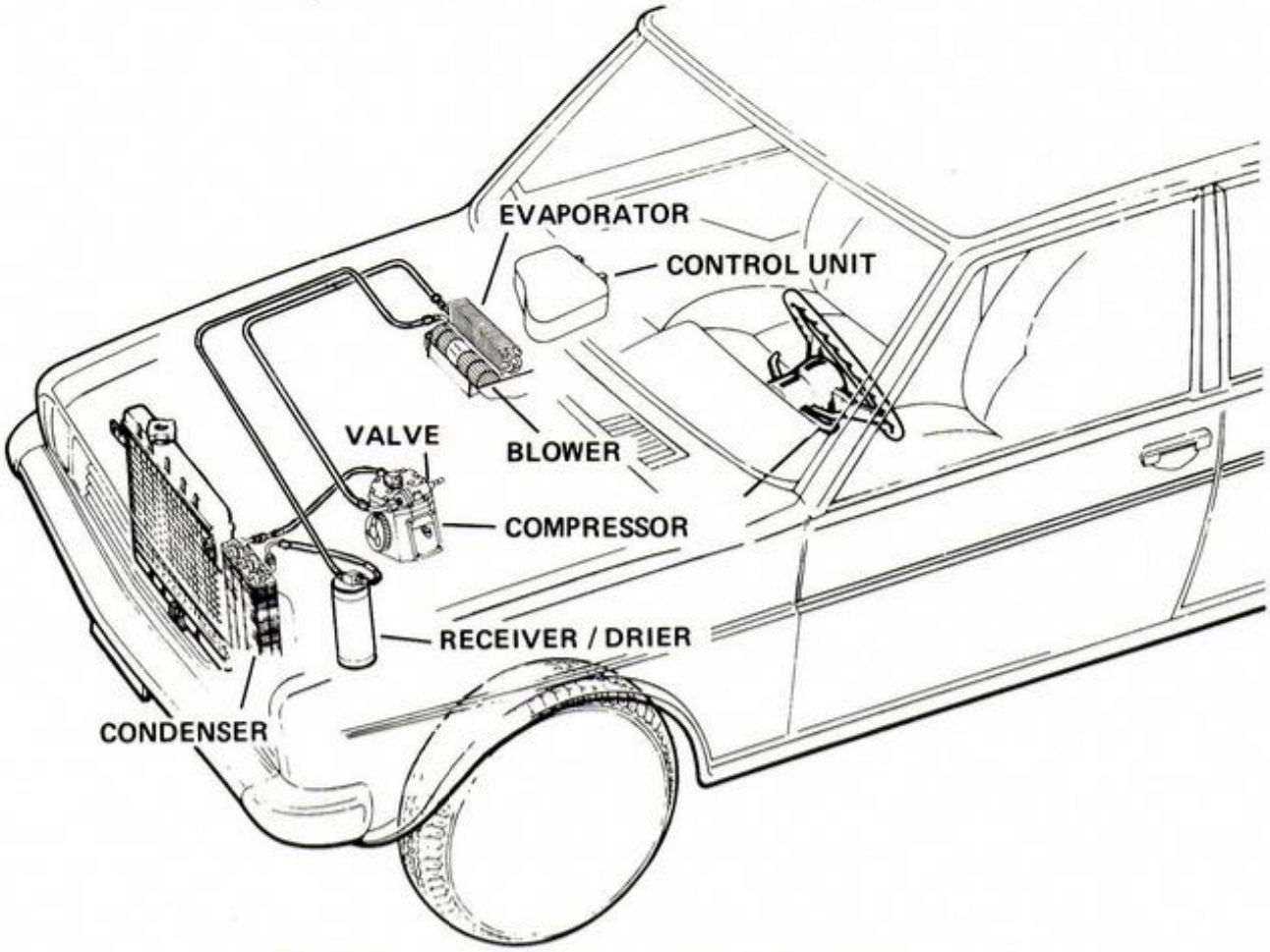

FIG 13:14 Layout of the air conditioning (refrigeration) system

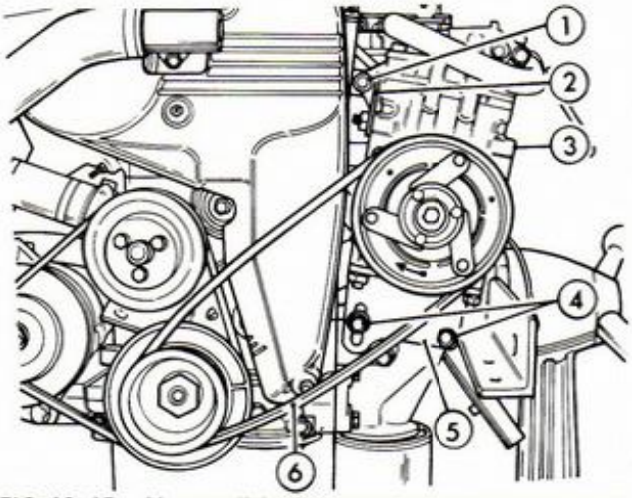

FIG 13:15 Air conditioning system compressor and drive belts

After the lock has been installed, check for correct opening and closing of the luggage compartment lid.

If the lid closes too tightly or loosely, the position of the lock striker can be adjusted slightly to compensate, after slackening the two fixing bolts. Firmly retighten the bolts after adjustment has been made.

13:6 The tailgate

Removal:

Refer to **FIG 13:12**. Disconnect heated rear window wiring connector 4. Remove nut 1 and washers holding stay 3 to tailgate panel 2. Have an assistant steady the tailgate, then remove the two bolts 5 on each side securing hinge 6 to body. Carefully lift off the tailgate.

Refitting is a reversal of the removal operation.

Tailgate lock removal:

Refer to **FIG 13:13**. Disconnect link 3 from lock 2. Remove nut 1 securing the lock to the tailgate panel, then remove the screws securing latch 4 to the panel.

Refitting is a reversal of the removal procedure.

13:7 Bumpers

To remove the front bumper on early models first disconnect the side light and direction indicator wiring inside the engine compartment, then remove the two outer bolts which secure the bumper ends to the front wings.

For the rear bumper, disconnect the number plate light wiring and, from inside the boot, remove the two outer bolts which secure the bumper ends to the rear wings.

Finally, for both front and rear bumpers, remove the six bolts which retain the bumper mounting brackets to the lower panel. The light and bracket assemblies are bolted to the rear of the bumpers.

To refit, reverse the removal procedure.

13:8 Air conditioning system

An air conditioning (refrigeration) system is available as an optional extra on some models. The layout of the system is shown in **FIG 13:14**.

Apart from the adjustment of drive belt tension described later in this section, all servicing and repair work to system components should be carried out only by a fully equipped service station. If the pressurised system is opened, liquid refrigerant will escape, immediately evaporating and instantly freezing anything it contacts. Uncontrolled release of the refrigerant will cause severe frostbite or possibly more serious injury if it contacts any part of the body.

Tensioning drive belts:

The tension of the belts driving the compressor unit from the pulleys on the crankshaft is correct if the belts can be deflected by approximately 12mm (½in).

If belt tension is incorrect, refer to **FIG 13:15** and slacken the bolt and nut 1 securing compressor 3 to bracket 2. Slacken four bolts 4 at lower bracket 5. Swing the compressor away from the engine until tension of belts 6 is correct, then hold in position while tightening all the bolts. Recheck the tension of the belts.

Any belt which is worn, damaged or contaminated with grease or oil should be renewed. To do this, slacken the mounting bolts as described previously and push the compressor towards the engine until the belts can be removed over the pulleys. Install the new belts, then set to the correct tension as described previously.

If the compressor is to be removed, the air conditioning system must be de-pressurised first. **Observe the warnings given earlier in this chapter and in Chapter 1.** Remove the drive belts as described previously, then remove the mounting bolts and detach the compressor complete with mounting brackets from the engine. Disconnect the hoses and lift the unit from the engine compartment.

APPENDIX

TECHNICAL DATA

Engine | Fuel system | Ignition system | Cooling system
Transmission | Suspension | Steering | Brakes
Electrical system | Weights | Wheels and tyres | Capacities
Tightening torques | Wiring diagrams

HINTS ON MAINTENANCE AND OVERHAUL

GLOSSARY OF TERMS

INDEX

Inches	Decimals	Milli-metres	Inches to Millimetres		Millimetres to Inches	
			Inches	mm	mm	Inches
1/64	.015625	.3969	.001	.0254	.01	.00039
1/32	.03125	.7937	.002	.0508	.02	.00079
3/64	.046875	1.1906	.003	.0762	.03	.00118
1/16	.0625	1.5875	.004	.1016	.04	.00157
5/64	.078125	1.9844	.005	.1270	.05	.00197
3/32	.09375	2.3812	.006	.1524	.06	.00236
7/64	.109375	2.7781	.007	.1778	.07	.00276
1/8	.125	3.1750	.008	.2032	.08	.00315
9/64	.140625	3.5719	.009	.2286	.09	.00354
5/32	.15625	3.9687	.01	.254	.1	.00394
11/64	.171875	4.3656	.02	.508	.2	.00787
3/16	.1875	4.7625	.03	.762	.3	.01181
13/64	.203125	5·1594	.04	1.016	.4	.01575
7/32	.21875	5.5562	.05	1.270	.5	.01969
15/64	.234375	5.9531	.06	1.524	.6	.02362
1/4	.25	6.3500	.07	1.778	.7	.02756
17/64	.265625	6.7469	.08	2.032	.8	.03150
9/32	.28125	7.1437	.09	2.286	.9	.03543
19/64	.296875	7.5406	.1	2.54	1	.03937
5/16	.3125	7.9375	.2	5.08	2	.07874
21/64	.328125	8.3344	.3	7.62	3	.11811
11/32	.34375	8.7312	.4	10.16	4	.15748
23/64	.359375	9.1281	.5	12.70	5	.19685
3/8	.375	9.5250	.6	15.24	6	.23622
25/64	.390625	9.9219	.7	17.78	7	.27559
13/32	.40625	10.3187	.8	20.32	8	.31496
27/64	.421875	10.7156	.9	22.86	9	.35433
7/16	.4375	11.1125	1	25.4	10	.39370
29/64	.453125	11.5094	2	50.8	11	.43307
15/32	.46875	11.9062	3	76.2	12	.47244
31/64	.484375	12.3031	4	101.6	13	.51181
1/2	.5	12.7000	5	127.0	14	.55118
33/64	.515625	13.0969	6	152.4	15	.59055
17/32	.53125	13.4937	7	177.8	16	.62992
35/64	.546875	13.8906	8	203.2	17	.66929
9/16	.5625	14.2875	9	228.6	18	.70866
37/64	.578125	14.6844	10	254.0	19	.74803
19/32	.59375	15.0812	11	279.4	20	.78740
39/64	.609375	15.4781	12	304.8	21	.82677
5/8	.625	15.8750	13	330.2	22	.86614
41/64	.640625	16.2719	14	355.6	23	.90551
21/32	.65625	16.6687	15	381.0	24	.94488
43/64	.671875	17.0656	16	406.4	25	.98425
11/16	.6875	17.4625	17	431.8	26	1.02362
45/64	.703125	17.8594	18	457.2	27	1.06299
23/32	.71875	18.2562	19	482.6	28	1.10236
47/64	.734375	18.6531	20	508.0	29	1.14173
3/4	.75	19.0500	21	533.4	30	1.18110
49/64	.765625	19.4469	22	558.8	31	1.22047
25/32	.78125	19.8437	23	584.2	32	1.25984
51/64	.796875	20.2406	24	609.6	33	1.29921
13/16	.8125	20.6375	25	635.0	34	1.33858
53/64	.828125	21.0344	26	660.4	35	1.37795
27/32	.84375	21.4312	27	685.8	36	1.41732
55/64	.859375	21.8281	28	711.2	37	1.4567
7/8	.875	22.2250	29	736.6	38	1.4961
57/64	.890625	22.6219	30	762.0	39	1.5354
29/32	.90625	23.0187	31	787.4	40	1.5748
59/64	.921875	23.4156	32	812.8	41	1.6142
15/16	.9375	23.8125	33	838.2	42	1.6535
61/64	.953125	24.2094	34	863.6	43	1.6929
31/32	.96875	24.6062	35	889.0	44	1.7323
63/64	.984375	25.0031	36	914.4	45	1.7717

UNITS	Pints to Litres	Gallons to Litres	Litres to Pints	Litres to Gallons	Miles to Kilometres	Kilometres to Miles	Lbs. per sq. In. to Kg. per sq. Cm.	Kg. per sq. Cm. to Lbs. per sq. In.
1	.57	4.55	1.76	.22	1.61	.62	.07	14.22
2	1.14	9.09	3.52	.44	3.22	1.24	.14	28.50
3	1.70	13.64	5.28	.66	4.83	1.86	.21	42.67
4	2.27	18.18	7.04	.88	6.44	2.49	.28	56.89
5	2.84	22.73	8.80	1.10	8.05	3.11	.35	71.12
6	3.41	27.28	10.56	1.32	9.66	3.73	.42	85.34
7	3.98	31.82	12.32	1.54	11.27	4.35	.49	99.56
8	4.55	36.37	14.08	1.76	12.88	4.97	.56	113.79
9		40.91	15.84	1.98	14.48	5.59	.63	128.00
10		45.46	17.60	2.20	16.09	6.21	.70	142.23
20				4.40	32.19	12.43	1.41	284.47
30				6.60	48.28	18.64	2.11	426.70
40				8.80	64.37	24.85		
50					80.47	31.07		
60					96.56	37.28		
70					112.65	43.50		
80					128.75	49.71		
90					144.84	55.92		
100					160.93	62.14		

UNITS	Lb ft to kgm	Kgm to lb ft	UNITS	Lb ft to kgm	Kgm to lb ft
1	.138	7.233	7	.967	50.631
2	.276	14.466	8	1.106	57.864
3	.414	21.699	9	1.244	65.097
4	.553	28.932	10	1.382	72.330
5	.691	36.165	20	2.765	144.660
6	.829	43.398	30	4.147	216.990

TECHNICAL DATA

Dimensions are in millimetres (inches) unless otherwise stated

OHV ENGINES

Designation :	
1300	131 A.000 or 131 A7.000
1600	131 A1.000
Bore and stroke :	
131 A.000	76.0 x 71.5 (2.99 x 2.81)
131 A7.000	76.1 x 71.5 (3.00 x 2.81)
131 A1.000	84.0 x 71.5 (3.31 x 2.81)
Capacity :	
131 A.000	1297cc
131 A7.000	1301cc
131 A1.000	1585cc
Compression ratio	9.2:1
Pistons :	
Diameter :	
131 A.000	76.000 (2.994)*
131 A7.000	76.100 (2.998)*
131 A1.000	84.000 (3.309)*
*Measured 52.4mm from piston crown	
Oversizes :	
131 A.000 and A1.000	+0.2, 0.4, 0.6 (+0.008, 0.016, 0.024)
131 A7.000	+0.15, 0.35, 0.55 (+0.006, 0.014, 0.022)
Clearance in bore	0.070 to 0.090 (0.0027 to 0.0035)
Bore for gudgeon pins :	
Grade 1	21.996 to 21.999 (0.8660 to 0.8661)
Grade 2	21.999 to 22.002 (0.8661 to 0.8662)
Piston rings :	
Thickness :	
Top	1.478 to 1.490 (0.0582 to 0.0587)
Centre	1.978 to 1.990 (0.0779 to 0.0784)
Bottom	3.925 to 3.937 (0.1546 to 0.1551)
Side clearance :	
Top	0.045 to 0.077 (0.0018 to 0.0030)
Centre	0.040 to 0.072 (0.0015 to 0.0028)
Bottom	0.030 to 0.062 (0.0011 to 0.0024)
End gap :	
1300 top and centre	0.30 to 0.50 (0.0118 to 0.0197)
Bottom	0.20 to 0.35 (0.0079 to 0.0138)
1600 top and centre	0.30 to 0.45 (0.0118 to 0.0177)
Bottom	0.25 to 0.40 (0.0098 to 0.0158)
Crankshaft :	
Main bearing journal diameter	52.985 to 53.005 (2.0860 to 2.0868)
Main bearing clearance	0.050 to 0.095 (0.0020 to 0.0037)
Crankpin diameter	48.224 to 48.244 (1.8986 to 1.8993)
Big-end clearance	0.018 to 0.070 (0.0007 to 0.0027)
Bearing shell undersizes	0.25, 0.51, 0.76, 1.02 (0.010, 0.020, 0.030, 0.040)
End float	0.055 to 0.305 (0.0022 to 0.0120)
Thrust washer thickness	2.310 to 2.360 (0.0910 to 0.0930)
Oversize range	2.437 to 2.487 (0.0960 to 0.0980)

Camshaft :	
Bearing bore diameter :	
Front	51.120 to 51.150 (2.0125 to 2.0136)
Centre	46.920 to 46.950 (1.8472 to 1.8483)
Rear	39.862 to 39.992 (1.5732 to 1.5744)
Clearance in bearing :	
Front and rear	0.026 to 0.071 (0.0010 to 0.0028)
Centre	0.031 to 0.076 (0.0012 to 0.0029)
Valves :	
Head diameter :	
Inlet	34.350 to 34.650 (1.3534 to 1.3652)
Exhaust :	
1300	30.850 to 31.150 (1.2155 to 1.2293)
1600	33.350 to 33.950 (1.3140 to 1.3376)
Stem diameter	7.974 to 7.992 (0.3142 to 0.3149)
Clearance in guide	0.030 to 0.066 (0.0012 to 0.0026)
Running clearance (cold)	0.20 (0.008)
Valve springs :	
Length under load of 29kg	33.7 (1.3278) outer
Length under load of 14kg	29.7 (1.1702) inner
Oil pump :	
Type	Gear
Pressure, hot at 6000r/min	2.9 to 4.9 bars (42 to 71lb/sq in)
Relief valve spring length	22.5 under load of 4.6kg (0.887 under load of 10lb)

OHC ENGINES

Designation :	
1300	131 B.000 or 131 B7.000
1600	131 B1.000
1800	132 A1.040.5 or 132 A1.040.6
2000	131 B2.000
Bore and stroke :	
131 B.000	76 x 71.5 (2.99 x 2.81)
131 B7.000	76.1 x 71.5 (3.00 x 2.81)
131 B1.000	84.0 x 71.5 (3.31 x 2.81)
132 A1.040	84.0 x 79.2 (3.31 x 3.12)
131 B2.000	84.0 x 90.0 (3.31 x 3.54)
Capacity :	
131 B.000	1297cc
131 B7.000	1301cc
131 B1.000	1585cc
132 A1.040	1756cc
131 B2.000	1995cc
Compression ratio :	
1300	8.9:1
1600	9.0:1
1800	8.0:1
2000	8.9:1
Pistons :	
Diameter :	
132 A1.040 :	
Grade A	83.950 to 83.960 (3.3051 to 3.3055)
Grade C	83.970 to 83.980 (3.3059 to 3.3063)
Grade E	83.990 to 84.000 (3.3066 to 3.3070)
Oversizes	0.2, 0.4, 0.6 (0.0079, 0.0157, 0.0236)

131 B2.000 :	
Grade A	83.920 to 83.930 (3.3039 to 3.3043)
Grade C	83.940 to 83.950 (3.3047 to 3.3051)
Grade E	83.960 to 83.970 (3.3055 to 3.3058)

Note : Pistons for 1300 and 1600 engines are of the same dimensions as for the equivalent OHV engine but measured 25mm from bottom of skirt. 1800 pistons are measured 30mm from piston crown. 2000 pistons are measured 52.4mm from piston crown. All measurements are at right angles to gudgeon pin.

Oversizes	+0.2, 0.4, 0.6 (+0.008, 0.016, 0.024)
Clearance in bore :	
1300	0.060 to 0.080 (0.0023 to 0.0031)
1600	0.050 to 0.070 (0.0019 to 0.0027)
1800	0.040 to 0.060 (0.0016 to 0.0023)
2000	0.070 to 0.090 (0.0027 to 0.0035)
Bore for gudgeon pins :	
Grade 1	21.996 to 21.999 (0.8660 to 0.8661)
Grade 2	21.999 to 22.002 (0.8661 to 0.8662)
Piston rings :	
Thickness :	
Top	1.478 to 1.490 (0.0581 to 0.0586)
Centre :	
1300	1.978 to 1.990 (0.0778 to 0.0783)
1600, 1800, 2000	1.980 to 2.000 (0.0779 to 0.0787)
Bottom	3.925 to 3.937 (0.1545 to 0.1549)
Side clearance :	
Top	0.045 to 0.077 (0.0018 to 0.0030)
Centre :	
1300	0.040 to 0.072 (0.0015 to 0.0028)
1600, 1800, 2000	0.030 to 0.070 (0.0011 to 0.0027)
Bottom	0.030 to 0.062 (0.0011 to 0.0024)
End gap :	
Top :	
1300	0.30 to 0.50 (0.0118 to 0.0196)
1600, 1800, 2000	0.30 to 0.45 (0.0118 to 0.0177)
Centre :	
1300	0.30 to 0.50 (0.0118 to 0.0196)
1600, 1800, 2000	0.30 to 0.45 (0.0118 to 0.0177)
Bottom :	
1300	0.20 to 0.35 (0.0078 to 0.0137)
1600, 1800, 2000	0.25 to 0.40 (0.0098 to 0.0157)
Gudgeon pins :	
Diameter :	
Grade 1	21.991 to 21.994 (0.8657 to 0.8659)
Grade 2	21.994 to 21.997 (0.8659 to 0.8661)
Oversize	+0.2 (+0.0079)
Clearance in piston	0.002 to 0.008 (0.0001 to 0.0003)
Crankshaft :	
Main bearing journal diameter	52.985 to 53.005 (2.0860 to 2.0868)
Main bearing clearance	0.032 to 0.077 (0.0012 to 0.0030)
Crankpin diameter :	
Grade A	50.792 to 50.802 (1.9996 to 2.0000)
Grade B	50.782 to 50.792 (1.9992 to 1.9996)
Big-end clearance :	
1300, 1600	0.030 to 0.074 (0.0011 to 0.0029)
1800, 2000	0.021 to 0.065 (0.0008 to 0.0026)

Main bearing undersizes	0.254, 0.508, 0.762, 1.016 (0.009, 0.019, 0.029, 0.039)
Big-end bearing undersizes	As for main bearings
End float	0.055 to 0.305 (0.0021 to 0.0120)
Camshaft:	
Journal diameter:	
Front	29.944 to 29.960 (1.1798 to 1.1804)
Centre	45.755 to 45.771 (1.8027 to 1.8034)
Rear	46.155 to 46.171 (1.8185 to 1.8191)
Bearing clearance:	
Front	0.049 to 0.090 (0.0019 to 0.0035)
Centre and rear	0.029 to 0.070 (0.0011 to 0.0028)
Auxiliary shaft:	
Journal diameter:	
Front	48.013 to 48.038 (1.8917 to 1.8927)
Rear	38.929 to 38.954 (1.5338 to 1.5348)
Bearing clearance	0.046 to 0.091 (0.0018 to 0.0035)
Valves:	
Head diameter:	
Inlet:	
1300	37.300 to 37.700 (1.4696 to 1.4854)
1600, 1800, 2000	41.600 to 42.000 (1.6390 to 1.6548)
Exhaust:	
1300	33.350 to 33.950 (1.3139 to 1.3376)
1600	35.850 to 36.450 (1.4125 to 1.4361)
Stem diameter	7.974 to 7.992 (0.3142 to 0.3149)
Clearance in guide	0.030 to 0.066 (0.0012 to 0.0026)
Running clearance (cold):	
Inlet:	
1300	0.42 (0.016)
1600, 1800, 2000	0.45 (0.018)
Exhaust:	
1300	0.48 (0.019)
1600, 1800, 2000	0.60 (0.024)
Valve springs:	
Length:	
Inner, under load of 15kg (33lb)	31 (1.22)
Outer, under load of 39kg (87lb)	36 (1.42)
Oil pump:	
Type	Gear
Pressure hot at 6000r/min:	
1300 and 1600	2.9 to 4.9 bars (42 to 71lb/sq in)
1800 and 2000	3.4 to 4.9 bars (49 to 71lb/sq in)

FUEL SYSTEM

Carburetter types:	
1300 and 1600 OHV	Solex C32 TEIE/42 or Weber 32 ADF7/250 or 7/150
1300 OHC	Solex C32 TEIE/1 or Weber 32 ADF13/250
1600 OHC	Solex C32 TEIE/2 or Weber 32 ADF14/250 or 14/150
1800 OHC	Weber 32 ADFA (various)
2000 OHC	Weber 32 ADF 15/250 or 15/150
Solex C32 TEIE/42:	
Main jet	1.275/1.35
Air correction jet	1.55/1.55

Emulsion tube	N64/N64
Idle jet	0.45/0.45
Power jet	0.80
Float level	6.5 to 7.5
Weber 32 ADF 7/250 and 7/150 :	
Main jet	1.17/1.25
Air correction jet	1.65/1.60
Emulsion tube	F73/F73
Idle jet	0.50/0.50
Power jet	1.00
Float level	6
Solex C32 TEIE/1 (/2) :	
Main jet	1.175/1.325 (1.200/1.325)
Idle jet	0.525/0.525 (0.525/0.525)
Idle air bleed	1.60/1.90 (1.60/1.90)
Pump jet	0.55 (0.55)
Float level	9.5 (9.5)
Weber 32 ADF 13/250 (14/250) :	
Main jet	1.12/1.15 (1.15/1.15)
Air correction jet	1.40/1.70 (1.65/1.70)
Emulsion tube	F52/F5 (F20/F5)
Idle jet	0.50/0.80 (0.50/0.80)
Idle air bleed	1.45/0.80 (1.30/0.70)
Power jet	1.30 (1.30)
Weber 32 ADFA :	
Main jet	1.25/1.40
Emulsion tube	F74/F74
Float level	5.5 to 7.5
Weber 32 ADF 15/250, 15/150 :	
Main jet	1.20/1.40
Air correction jet	1.40/1.80
Idle jet	0.47/0.90
Idle air bleed	1.00/0.70
Pump jet	0.40

IGNITION SYSTEM

Firing order	1–3–4–2
Distributor type :	
Contact breaker	Various by Marelli or Ducellier
Electronic	Marelli AE1200A or Bosch 0.277.100.014
Contact points gap :	
Single contact	0.37 to 0.43 (0.015 to 0.017)
Dual contact :	
Start	0.31 to 0.49 (0.012 to 0.019)
Run	0.37 to 0.43 (0.015 to 0.017)
Air gap	0.3 to 0.4 (0.012 to 0.016)
Dwell angle	55° ± 3°
Static timing	10° BTDC
Sparking plugs :	
OHV engines	Champion N9Y
OHC engines	Champion N7Y or equivalent in other makes
Gap	0.6 to 0.7 (0.024 to 0.028)

COOLING SYSTEM

Fan thermo-switch (not 1300 standard models) :	
Cuts in at	90° to 94°C (194° to 201°F)
Cuts out at	85° to 89°C (185° to 192°F)

Thermostat:	
Starts opening	81° to 85°C (178° to 185°F)
Minimum opening at 92°C (198°F)	7.5 (0.29)
Radiator cap opening pressure	0.8kg/sq cm (11.4lb/sq in)

TRANSMISSION

Clutch:		
Type	Single dry plate, diaphragm spring	
Driven plate diameter:		
1300	181.5 (7.145)	
1600 four-speed	200 (7.874)	
1600 five-speed, 1800 and 2000	215 (8.307)	
Pedal free travel (models before May 1978)	25 (1.0)	
Manual gearbox:		
Gear ratios:	*Four-speed*	*Five-speed*
First	3.667	3.612
Second	2.100	2.045
Third	1.361	1.357
Fourth	1.000	1.000
Fifth	—	0.870
Reverse	3.526	3.244
Automatic transmission:		
Type	GMS three-speed	
Gear ratios:		
First	2.400	
Second	1.480	
Third	1.000	
Reverse	1.920	
Fluid	Fiat G1/A or Dexron	

SUSPENSION

Type:	
Front	Independent, coil springs, transverse arms, telescopic struts, anti-roll bar
Rear	Live axle, coil springs, four trailing arms, transverse rod
Front suspension geometry:	
Camber	0° to 1°
Caster	4° to 5°
Front wheel toe-in:	
1300 and 1600 models	1 to 5 (0.039 to 0.196)
1800 models	2 to 4 (0.078 to 0.157)
2000 models	1 to 5 (0.039 to 0.196)

Settings are for car as loaded with four persons

STEERING

Type	Rack and pinion
Steering wheel turns, lock to lock	3.4
Corresponding rack travel	136 (5.35)
Vehicle turning circle	10.6m (34.76ft)

BRAKES

Type	Disc front, drum rear, with vacuum servo assistance
Adjustment	Automatic on all four units
Minimum pad and lining thickness	1.5 (0.06)

Discs:	
Maximum runout:	
2000 Sport	0.025 (0.001)
Other models	0.15 (0.006)
Minimum thickness	9.0 (0.35)
Drums:	
Diameter	228.3 to 228.6 (8.988 to 9.000)
Maximum allowable diameter (wear limit)	230 (9.055)
Maximum diameter allowable after resurfacing	229.4 (9.030)
Brake fluid	Fiat Blue Label Brake Fluid or DOT 3

ELECTRICAL SYSTEM

Polarity	Negative earth
Battery:	
Capacity	45amp/hr at 20hr rate
Heavy discharging rate	185amps at −18°C
Alternator:	
Type	Marelli A.124-14V or AA125-14V Bosch K1-14V
Regulator	RC.2/12D or RC.2/12E
Starter motor:	
Type, 1300	Marelli E84 0.8/12
Type, 1600, 1800 and 2000	Marelli E100-1.3/12

(or Femsa or Bosch equivalents)

WEIGHTS

1300 and 1600:	
4-door Saloons:	
131	985kg (2,172lb)
131 Special	995kg (2,195lb)
2-door Saloon:	
131	965kg (2128lb)
131 Special	975kg (2150lb)
Estate:	
131	1020kg (2249lb)
131 Special	1030kg (2272lb)
Extra with automatic transmission	20kg (44lb)
Extra with five-speed gearbox	5.0kg (11lb)
1800:	
2- and 4-door Saloons:	
Manual transmission	1116kg (2460lb)
Automatic transmission	1129kg (2490lb)
Estate:	
Manual transmission	1138kg (2510lb)
Automatic transmission	1152kg (2540lb)
2000 Sport	1070kg (2360lb)
Air conditioning (refrigeration) all models	36kg (80lb)

Figures are for kerb weight

WHEELS AND TYRES

Wheel size:	
Saloon	4½J or 5J x 13
Estate	5J x 13
2000 Sport	5½J x 13
Tyres:	
Saloon	155SR or 165SR x 13 radial-ply
Estate	165SR x 13 radial-ply
2000 Sport	185/70 SR x 13

Inflation pressures:

1300 and 1600 Saloons:	
Front and rear (from May 1978)	1.76 bar (26lb/sq in)
Rear (earlier models)	1.96 bar (28lb/sq in)
1300 and 1600 Estate:	
Front	1.76 bar (26lb/sq in)
Rear	2.16 bars (31lb/sq in)
1800 Saloon and Estate:	
Front	1.76 bar (25.2lb/sq in)
Rear	1.96 bar (28.0lb/sq in)
2000 Sport:	
Front	1.76 bar (25.2lb/sq in)
Rear	1.86 bar (27.0lb/sq in)

CAPACITIES

Fuel tank:	
1300 and 1600	50 litres (11 Imp. gall.)
1800	46.2 litres (12.2 US gall.)
Cooling system:	
1300	7.6 litres (13½ Imp. pints)
1600	7.4 litres (13 Imp. pints)
1800	7.5 litres (8 US quarts)
2000	8.2 litres (14½ Imp. pints)
Engine and filter:	
1300 and 1600	4.0 litres (7 Imp. pints)
1800	3.75 litres (4 US quarts)
2000	4.8 litres (8½ Imp. pints)
Transmission:	
Four-speed manual	1.35 litre (2⅓ Imp. pints)
Five-speed manual (and four-speed from May 1978)	1.8 litre (3⅕ Imp. pints, 3.8 US pints)
Automatic	2.8 litres (5 Imp. pints, 3 US quarts)
Rear axle	1.0 litre (1⅔ Imp. pint, 2.1 US pints)
Steering gear	0.15 litre (¼ Imp. pint, 0.316 US pint)

TIGHTENING TORQUES

1300 and 1600 engine:	*kgm*	*lb/ft*
Front main bearing cap bolt	8	58
Other main bearing cap bolt	11.5	83
Head bolt	8.5	61
Head and rocker pedestal bolt	8.5	61
Valve clearance adjuster nut	4	29
Manifold nut	2.5	18
Big-end cap nut	5	36
Flywheel bolt	8.5	61
Camshaft sprocket bolt	12	87
Crankshaft sprocket nut	20	144
Head coolant outlet nut	2	14
Alternator upper bracket bolt	5.5	40
Alternator lower bracket nut	7	50
Sparking plug	4	29
Oil pressure sender	3.5	25
Water temperature sender	5	36
Engine mountings:		
Front mounting to crossmember	3.5	25
Rear crossmember to body	2.5	18

	kg/m	lb/ft
Rear mounting to crossmember	2.5	18
Rear mounting to gearbox	3	22
1800 engine:		
Front main bearing cap bolt	8	58
Other main bearing cap bolt	11.5	83
Breather mounting bolt	2.5	18
Head bolt	7.5	54
Intake manifold nut	2.5	18
Exhaust manifold nut	2.5	18
Big-end cap nut	6.5	47
Flywheel bolt	8.5	61
Camshaft sprocket bolt	12	87
Tensioner nut	4.5	32
Crankshaft pulley nut	25	181
Alternator lower support nut	4.5	32
Alternator upper bracket bolt	5.5	40
Alternator lower mounting nut	7	51
Alternator to upper bracket nut	4.5	32
Sparking plug	4	29
Oil pressure sender	3.5	25
Water temperature sender	5	36
Engine mountings:		
Insulator to mount nut	3	22
Insulator to crossmember bolt	3.5	25
Mount to engine nut	2.5	18
Rear crossmember to body bolt	3	22
Rear insulator to crossmember nut	2.5	18
Insulator to manual gearbox	3	22
Insulator to automatic transmission	5	36
2000 engine:		
Front main bearing cap bolt	8.2	59
Other main bearing cap bolts	11.5	83
Big-end cap bolts	11.5	83
Breather bolt	2.3	16.6
Cylinder head bolts	8.5	61
Cam box bolts	2.2	15.8
Manifold nuts	2.5	18
Big-end bearing cap nuts	7.5	54
Flywheel bolt	14.5	104
Oil pump mounting bolt	2	14
Compressor bolts and nuts	5	36
Alternator/water pump/compressor pulley nut	25	180
Four-speed gearbox:		
Reverse lamp switch	4.5	32
Interlock retaining bolt	2.5	18
Bellhousing to engine bolt	8.5	61
Bellhousing nut	2.5	18
Extension housing nut	2.5	18
Output shaft sleeve nut	8	58
Bearing to layshaft bolt	9.5	69
Selector fork bolt	2	14
Bellhousing to gearbox bolt	5	36
Extension housing to gearbox bolt	2.5	18
Flywheel inspection cover bolt	2	14
Starter motor to gearbox bolt	2	14

Five-speed gearbox:		
Reverse lamp switch	4.5	32
Interlock retaining bolt	2.5	18
Starter motor to gearbox support bolt	2	14
Gearbox to engine bolt	8.5	61
Plate and gearbox to front cover	5	36
Rear cover to gearbox bolt	2.5	18
Selector fork bolt	2	14
Primary shaft rear bearing retention plate bolt (Phillips)	3	22
Automatic transmission:		
Converter to drive plate bolt	6.5	47
Transmission to engine bolt	8.5	61
Starter motor bolt	2	14
Mounting to rear cover bolt	5	36
Selector lever to gearbox nut	2	14
Selector lever to support nut	1.5	11
Propeller shaft:		
Fork to front shaft nut	3	22
Front coupling nut	7	51
Rear axle coupling flange nut	3.5	25
Central support to crossmember	2.5	18
Crossmember to floor	2.5	18
Rear suspension:		
Damper mounting to body nut	2.5	18
Damper to mounting nut	1.5	11
Damper to axle nut	5	36
Lower trailing arm bracket to body	5	36
Upper trailing arm bracket to body	8	58
Transverse rod bracket to body	5	36
Trailing arm to bracket nut	8	58
Transverse rod to bracket nut	8	58
Transverse rod to axle nut	10	72
Wheel bolt	9	65
Front suspension:		
Control arm to crossmember nut	9	65
Control arm to hub carrier nut	8	58
Upper strut to hub carrier nut	6	43
Lower strut to hub carrier nut	5	36
Upper suspension mounting nut	2.5	18
Anti-roll bar bracket bolt	9	65
Anti-roll bar to control arm nut	6	43
Crossmember to body bolt	9	65
Wheel bolt	9	65
Braking system:		
Pedal bracket to bulkhead nut	1.5	11
Brake and clutch pedal pin nut	3	22
Handbrake to floor bolt	2.5	18
Servo to bulkhead nut	2.5	18
Master cylinder to servo nut	2.5	18
Caliper to hub carrier bolt	5	36
Disc shield to front brake mount	2	14
Pipe union to caliper	3	22

Plastigage may be obtained from World Radio Limited, Kaylene Works, Waterloo Road, Cricklewood, London NW2 7UH.

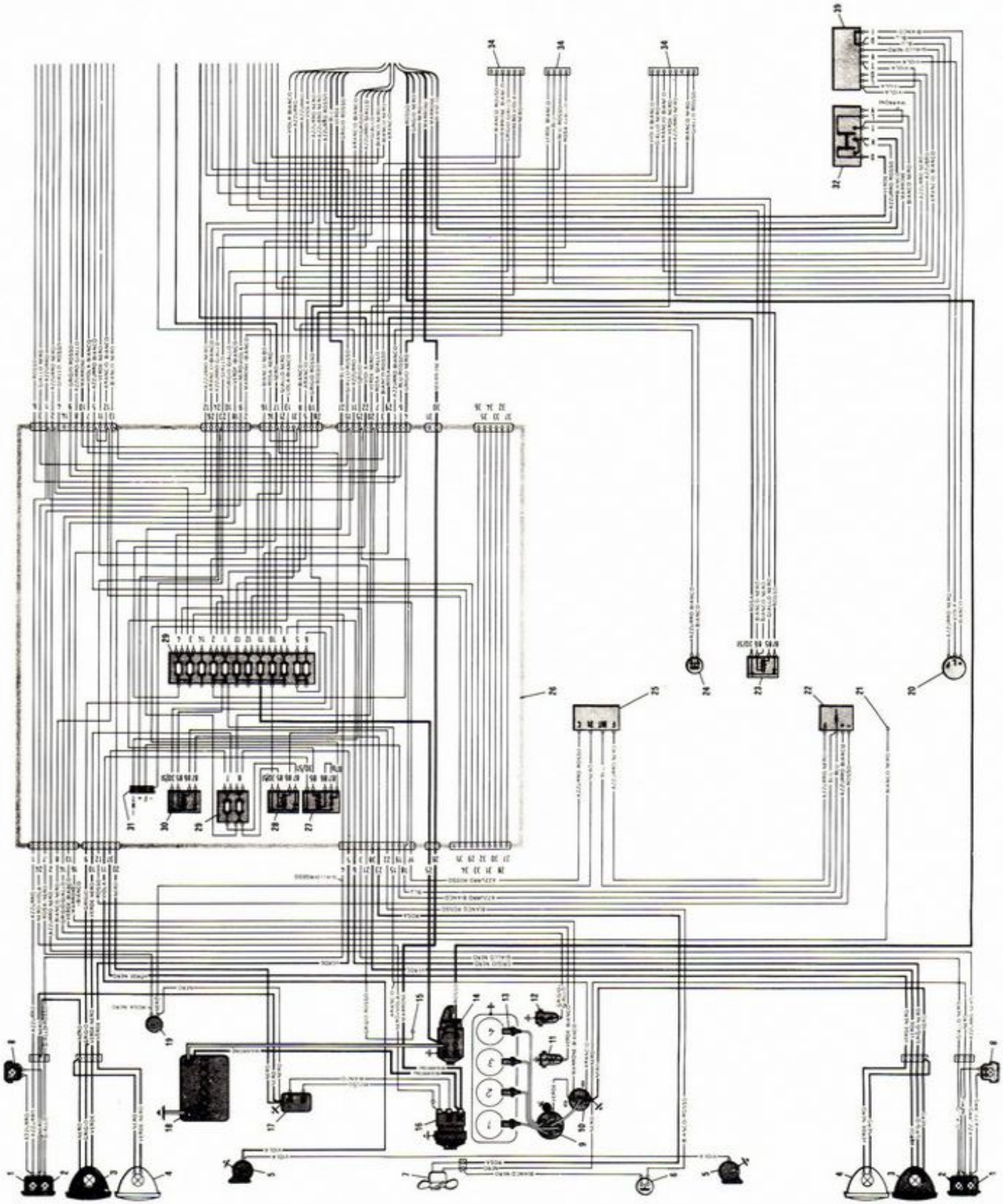

FIG 14 : 1 Wiring diagram – part 1 (see FIG 14 : 2 for key)

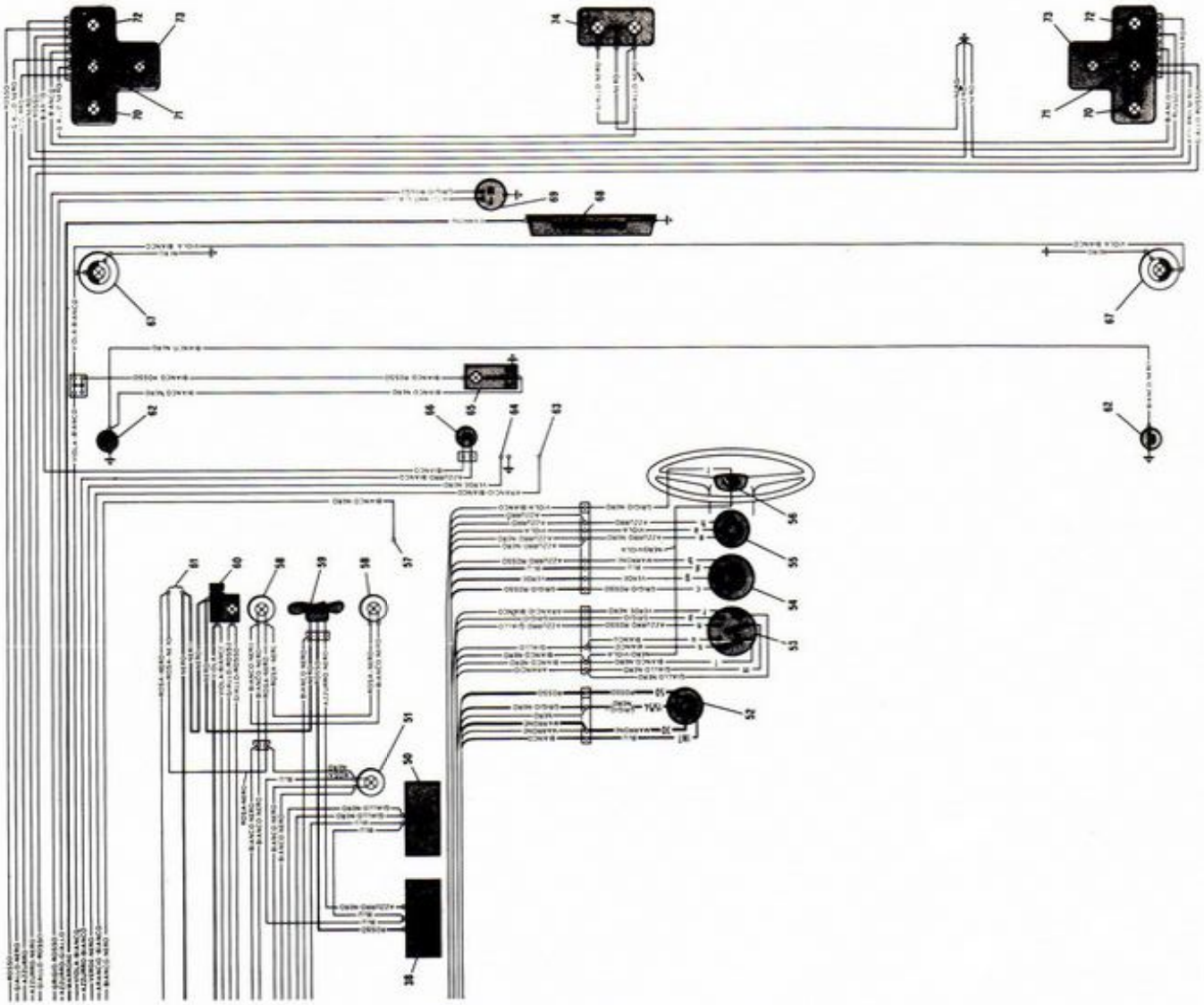

FIG 14:2 Wiring diagram—part 2

Key to Fig 14:1 1 Front direction indicators 2 Side lights 3 Headlamp, main and dipped beams 4 Headlamp, main beams (four headlamp version) 5 Horns 6 Radiator fan control switch 7 Radiator fan motor 8 Repeater lights 9 Distributor 10 Ignition coil 11 Water temperature transmitter 12 Oil pressure transmitter 13 Spark plugs 14 Starter motor 15 Automatic transmission lead (optional) 16 Alternator 17 Voltage regulator 18 Battery 19 Windscreen washer pump 20 Direction indicator flasher 21 Brake warning lamp lead 22 Wiper interrupter 23 Heated rear screen relay 24 Stop light switch 25 Wiper motor 26 Central control box 27 Radiator fan motor relay 28 Headlamp relay 29 Fuse unit 30 Horn relay 31 Wiper interrupter connector 32 Lighting/panel light switch 34 Connectors to instrument panel 39 Hazard warning switch leads

Key to Fig 14:2 38 Heater fan switch 50 Heated rear screen switch 51 Panel switch light guide cable lamp 52 Ignition switch 53 Wiper/washer switch 54 Headlamp switch 55 Direction indicator switch 56 Horn switch 57 Handbrake warning transmitter 58 Heater dial lamp 59 Heater fan motor 60 Cigar lighter/light 61 Glove box light leads 62 Door switch 63 Selector lever indicator lead 64 Automatic transmission lead 65 Courtesy light/switch 66 Reversing light switch 67 Rear interior lights/switches 68 Heated rear screen (optional) 69 Fuel transmitter 70 Rear direction indicators 71 Rear lights 72 Stop lights 73 Reversing lights 74 Number plate lights

Cable colour code: **Arancio** Amber **Azzurro** Light blue **Bianco** White **Blu** Dark blue **Giallo** Yellow **Grigio** Grey **Marrone** Brown **Nero** Black **Rosa** Pink **Rosso** Red **Verde** Green **Viola** Mauve

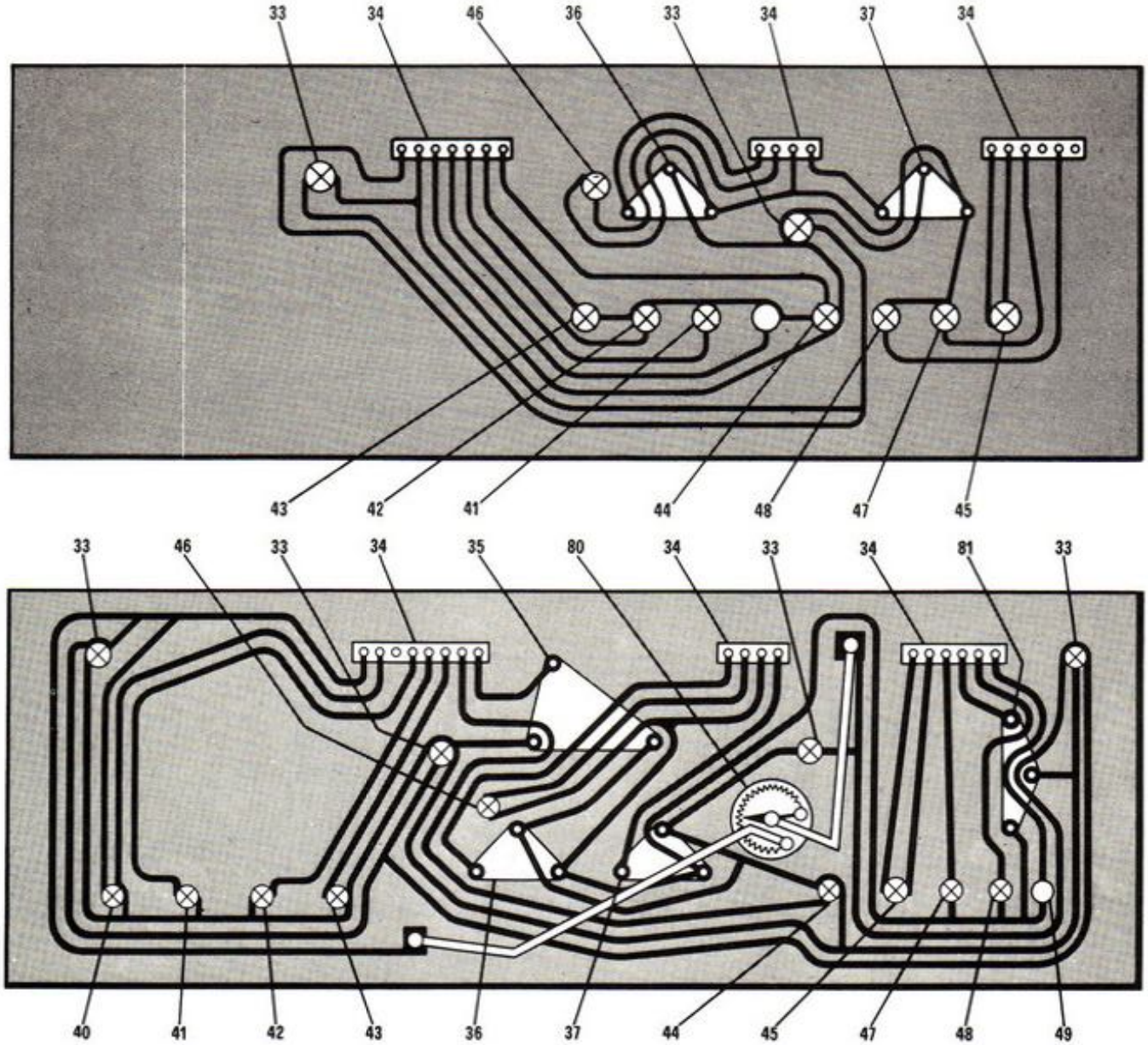

FIG 14:3 Instrument panel printed circuits. Above: standard model. Below: with clock and tachometer

Key to Fig 14:3 33 Panel lights 34 Connectors 35 Clock 36 Fuel gauge 37 Water temperature gauge 40 Side lamps warning light 41 Direction indicators warning light 42 Main beam warning light 43 Hazard flasher warning light 44 Heated rear window warning light 45 Ignition warning light 46 Fuel level warning light 47 Oil pressure warning light 48 Brake system warning light 49 Spare warning light 80 Panel light dimmer 81 Tachometer

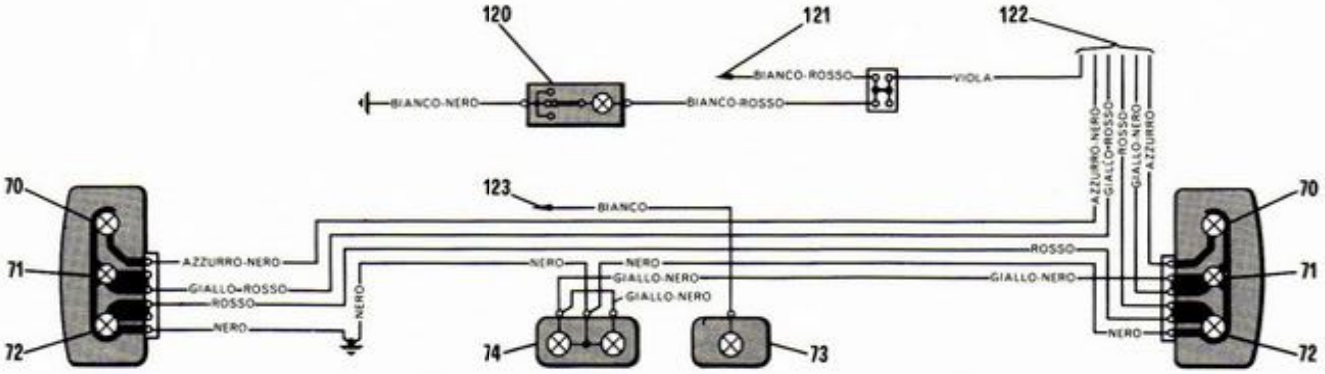

FIG 14:4 Additional wiring: Estate models

Key to Fig 14:4 70 Rear direction indicators 71 Rear lights 72 Brake lights 73 Reversing lights 74 Number plate lights 120 Interior light and switch 121 To courtesy light (see 65) 122 To rear cable connector of central control box (see 26) 123 To reversing light switch (see 66) (References in brackets to items in **Figs 14:1** and **14:2**)

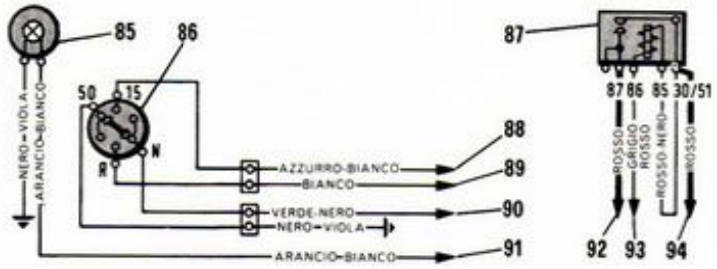

FIG 14:5 Additional wiring: automatic transmission

Key to Fig 14:5 85 Selector lever indicator (see lead 63) 86 Starter inhibitor and reversing light switch (replaces switch 66, see lead 64) 87 Starter relay 88 To rear cable connector terminal 5 (see 26) 89 To reversing lights 90 To rear cable connector terminal 11 (see 26) 91 To rear cable connector terminal 12 (see 26) 92 To starter terminal 50 (see 14) 93 To engine compartment connector terminal 21 (see 26) 94 To ignition switch terminal 50 (see 52) (References in brackets to items in **Figs 14:1** and **14:2**)

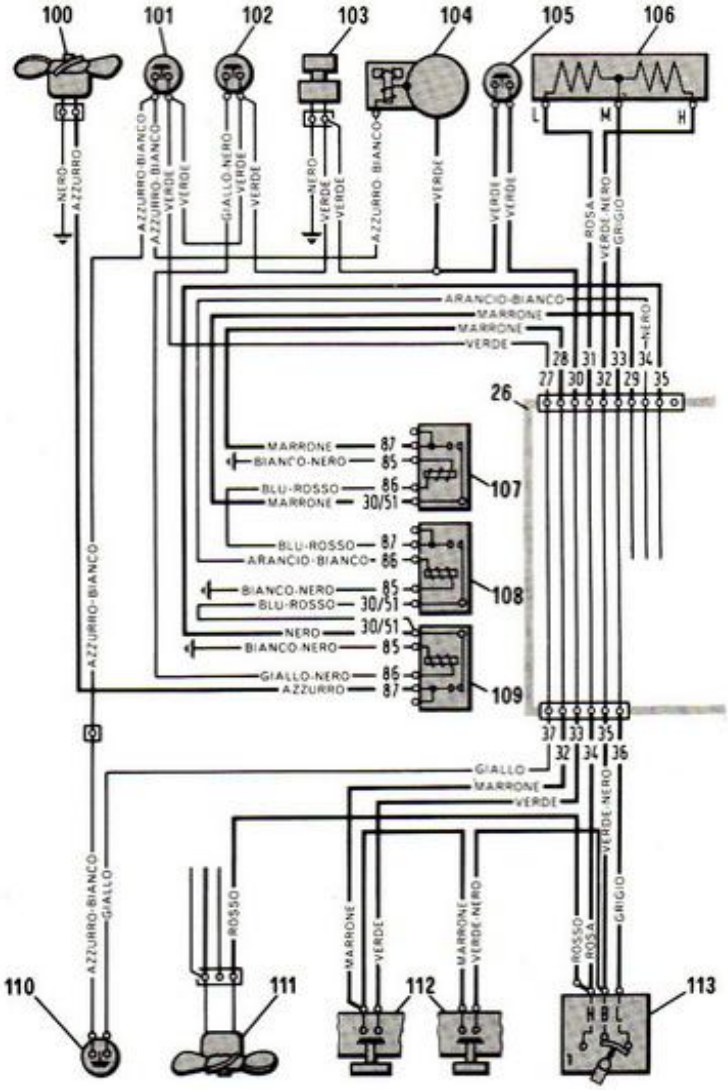

FIG 14:6 Additional wiring: air conditioning equipment

Key to Fig 14:6 26 Central control box 100 Condenser cooling fan 101 Radiator-mounted temperature switch 102 Condenser-mounted temperature switch 103 Fast-idle solenoid valve 104 Compressor and solenoid valve 105 Low pressure switch 106 Conditioner fan speed selector resistor 107 Compressor and evaporator fan relay 108 Master relay 109 Condenser cooling fan relay 110 Compressor solenoid valve temperature switch 111 Conditioner cooling fan 112 Conditioner control board 113 Conditioner fan motor switch

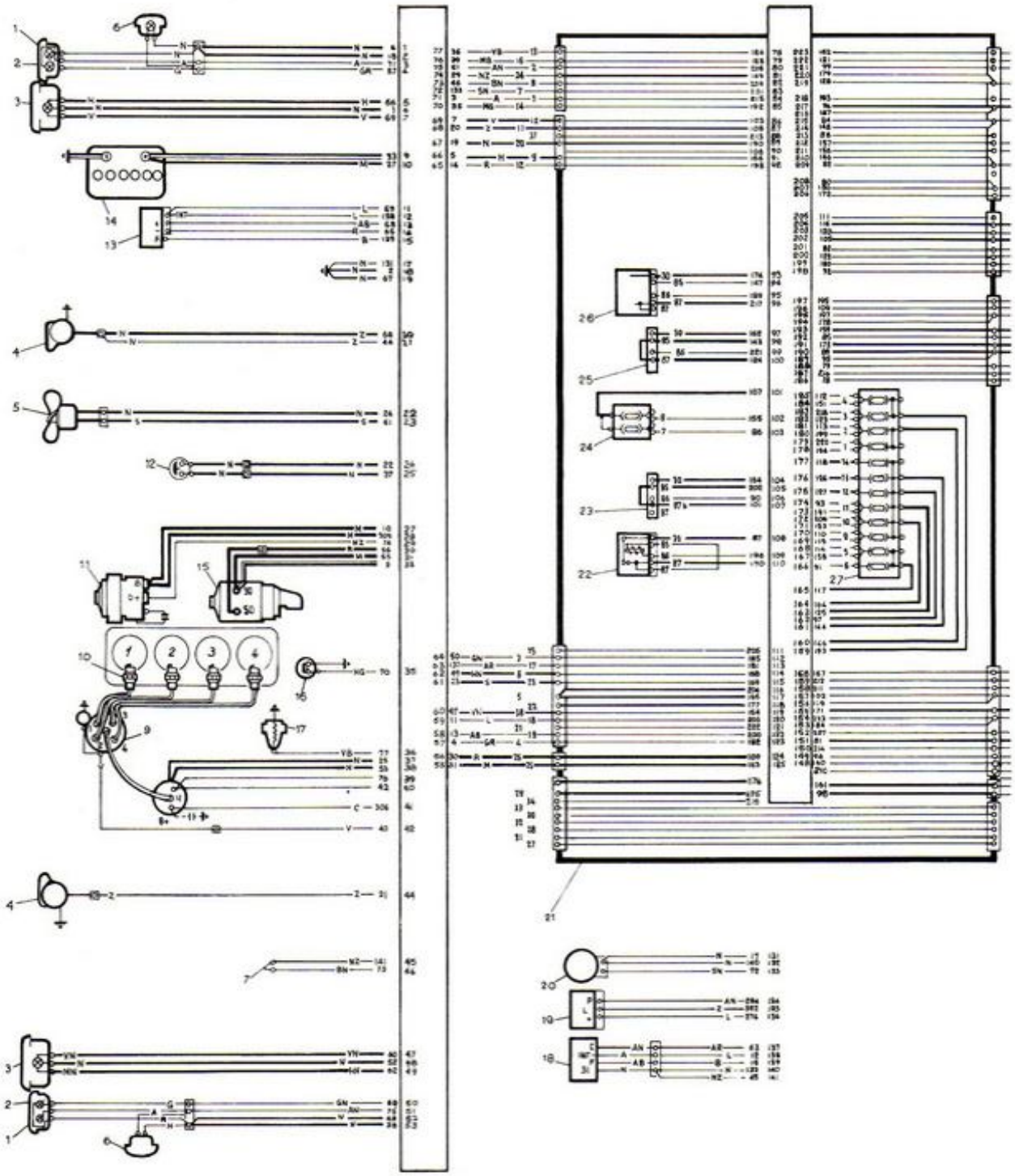

FIG 14 : 7 Wiring diagram – 131 L Saloon

Key to Fig 14 : 7 1 Front direction indicators 2 Side lights 3 Headlamp main and dipped beams 4 Horns 5 Radiator fan motor 6 Repeater lights 7 Cables (brake fluid level indicator) 8 Ignition coil 9 Distributor 10 Sparking plugs 11 Alternator 12 Radiator fan control switch 13 Wiper interrupter 14 Battery 15 Starter 16 Oil pressure transmitter 17 Coolant temperature transmitter 18 Wiper motor 19 Direction indicator flasher 20 Washer pump 21 Central connections unit 22 Horn relay 23 Connections (main beam relay) 24 Fuse unit 25 Cables (inhibitor switch, automatic transmission) 26 Heated rear screen relay 27 Fuse unit 28 Lighting switch 29 Panel lights 30 Instrument panel connectors 31 Fuel w/l 32 Fuel gauge 33 Coolant temperature gauge 34 Heater fan switch 35 Heated rear screen switch 36 Ignition w/l 37 Oil pressure w/l 38 Brake fluid level and handbrake w/l 39 Heated rear screen w/l 40 Spare w/l 41 Direction indicator w/l 42 Headlamp w/l 43 Hazard w/l 44 Hazard warning switch 45 Rear fog lamp switch and w/l 46 Heater fan motor 47 Ignition switch 48 Wiper/washer switch

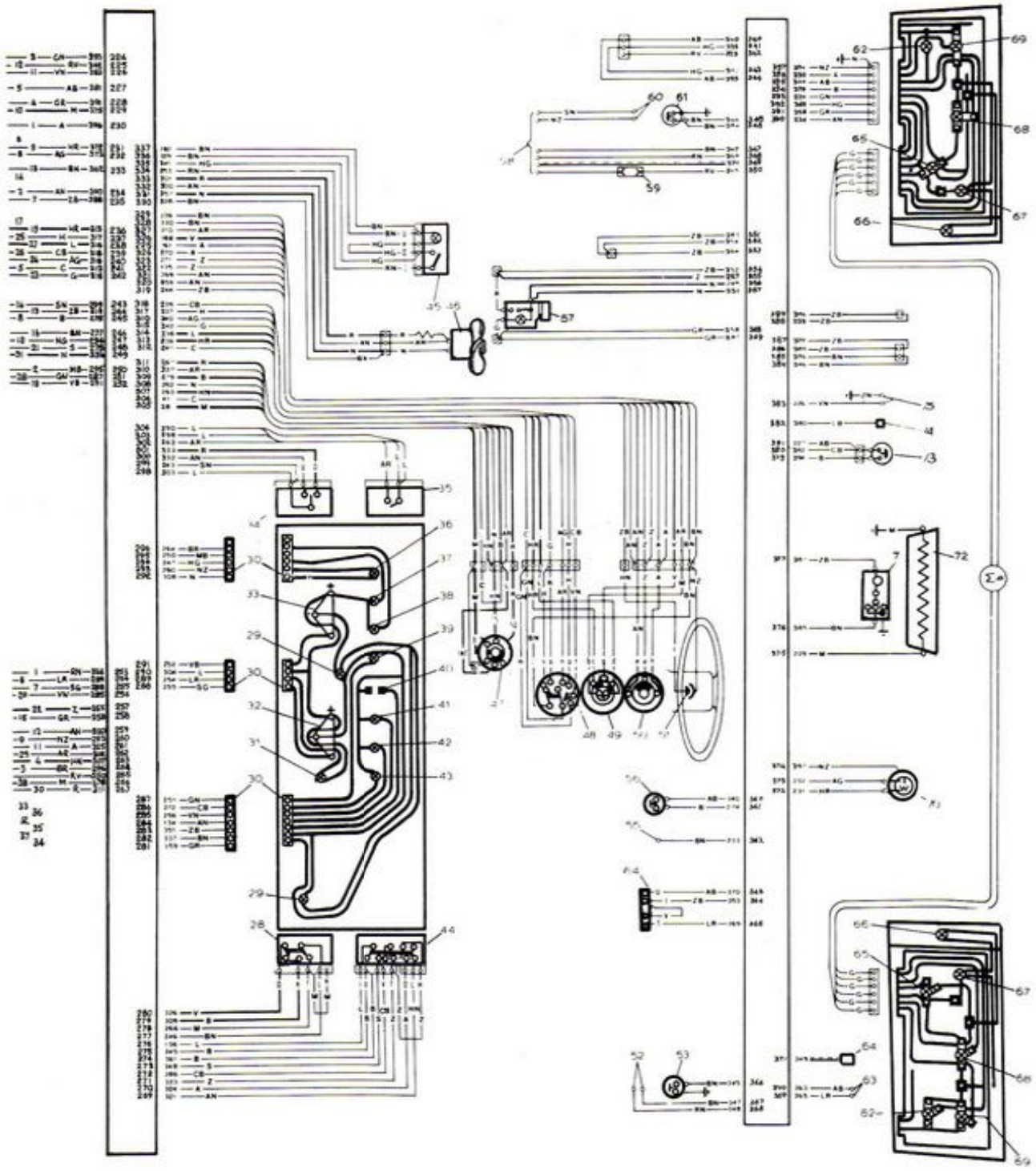

49 Headlamp control lever 50 Direction indicator lever 51 Horn control 52 Cables (lefthand loudspeaker) 53 Door switch 54 Cables (aerial motor) 55 Cables (handbrake w/l) 56 Stop light switch 57 Cigar lighter 58 Cables (radio) 59 Radio fuse 60 Cables (righthand loudspeaker) 61 Door switch 62 Stop lights 63 Cables (aerial motor) 64 Aerial lead 65 Rear lights 66 Number plate lights 67 Rear fog lamps 68 Reverse lights 69 Rear direction indicators 70 Fuel gauge transmitter 71 Courtesy light/switch 72 Heater rear screen 73 Reverse light switch 74 Connector (selector lever indicator, automatic transmission) 75 Cables (inhibitor switch, automatic transmission)

w/l = Warning light

Cable colour code: **A** Light blue **B** White **C** Amber **G** Yellow **H** Grey **L** Blue **M** Brown **N** Black **R** Red **S** Pink **V** Green **Z** Mauve

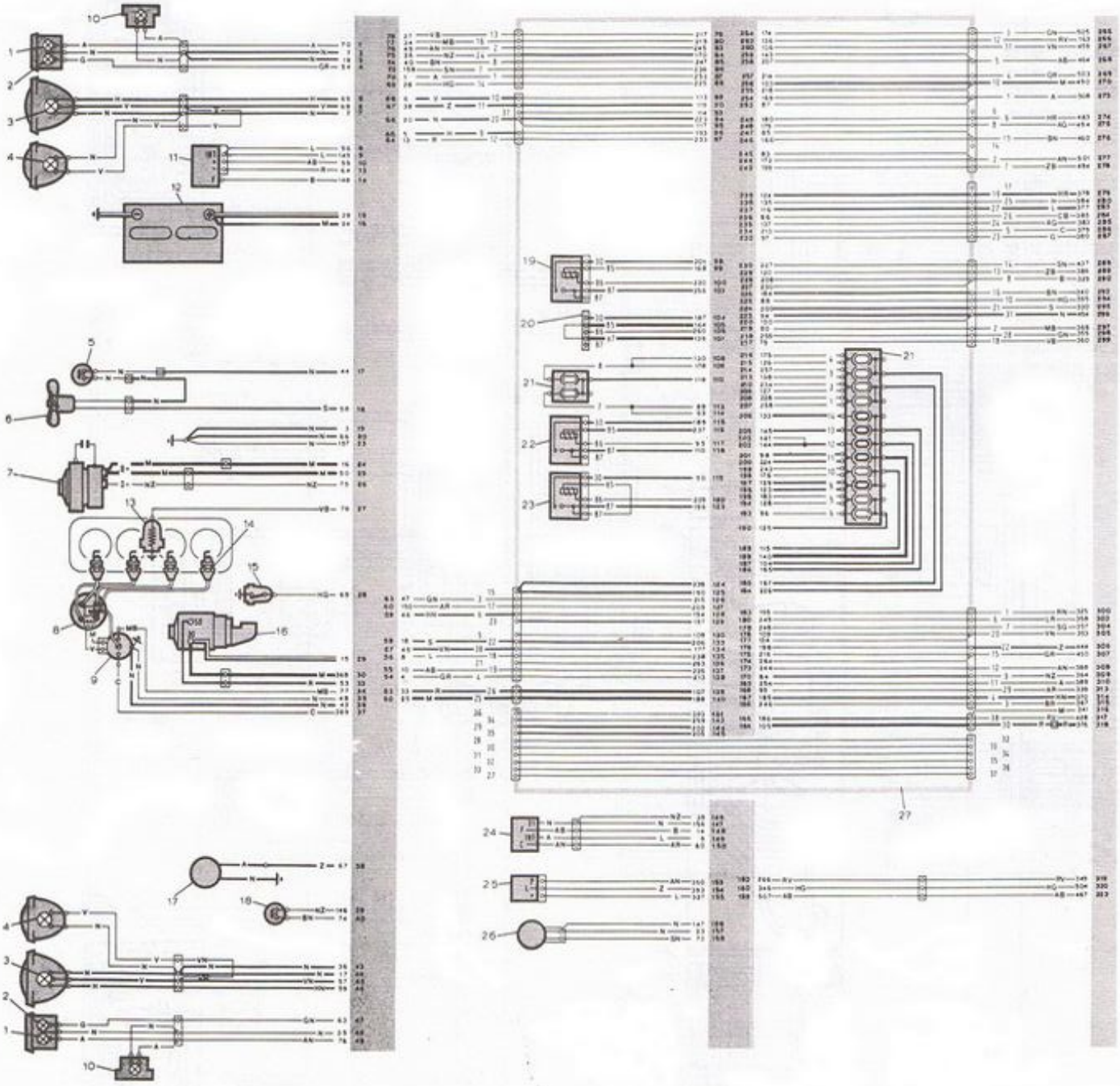

FIG 14 : 8 Wiring diagram – 2000 Sport

Key to Fig 14 : 8 1 Front direction indicators (21W, spherical) 2 Side lights (5W, spherical) 3 Headlamp main and dipped beams (40/55W, halogen) 4 Headlamp main beams (55W, halogen) 5 Radiator fan control switch 6 Radiator fan motor 7 Alternator 8 Ignition distributor and reluctor 9 Control box and ignition coil (Magneti Marelli electronic ignition) 10 Repeater lights (4W, tubular) 11 Windscreen wiper interrupter 12 Battery 13 Engine coolant temperature transmitter 14 Spark plugs 15 Oil pressure transmitter 16 Starter 17 Horn compressor 18 Brake fluid level transmitter 19 Heated backlight relay 20 Connections preset for fitting starter relay (131 Mirafiori models, 1600cm^3, fitted with automatic transmission) 21 Fuses 22 Main beam relay 23 Horn relay 24 Windscreen wiper motor 25 Direction indicator (and hazard warning lights, where mandatory) flasher 26 Windscreen washer pump 27 Centralised connections unit 28 Panel lights (1.2W, w/b) 29 Electronic tachometer 30 Instrument panel connectors 31 Quartz crystal clock 32 Fuel warning light (1.2W, w/b) 33 Spare w/l housing 34 Brake fluid level and handbrake 'on' w/l (1.2W, w/b) 35 Oil pressure w/l (1.2W, w/b) 36 Ignition w/l (3W, w/b) 37 Heated backlight w/l (1.2W, w/b) 38 Panel light rheostat 39 Engine coolant temperature gauge 40 Fuel gauge 41 Hazard w/l (1.2W, w/b, where mandatory) 42 Headlamp w/l (1.2W, w/b) 43 Direction indicator w/l (1.2W, w/b) 44 Side light w/l (1.2W, w/b) 45 Rear fog lamp w/l (1.2W, w/b) 46 Spare switch housing 47 Rear fog lamp switch 48 Hazard warning switch (where mandatory) 49 Heated backlight switch 50 Lighting/panel light switch 51 Ideogram illumination light guide cable lamp (1.2W, w/b) 52 Heater ideogram lamps (1.2W, w/b)

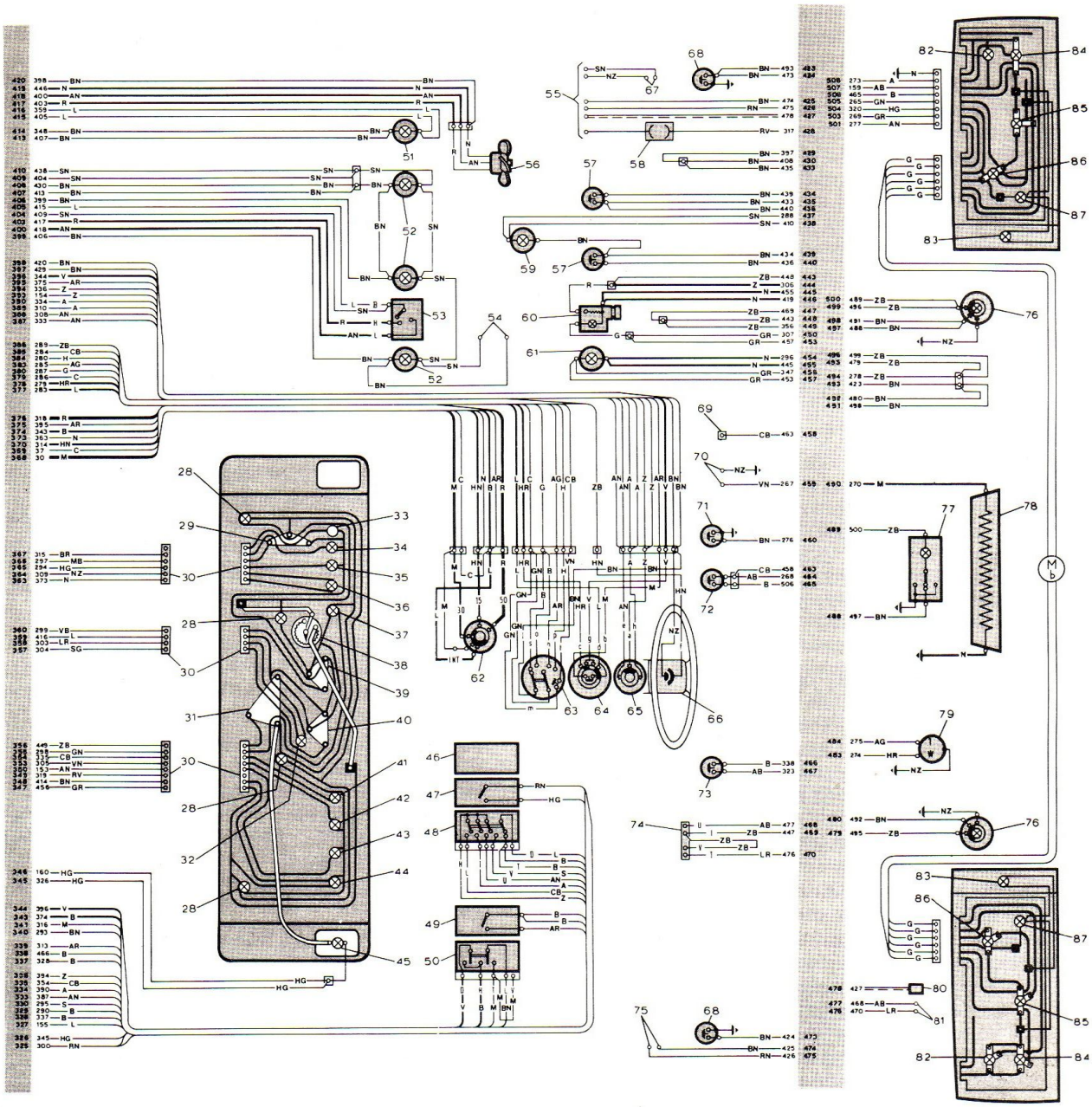

53 Heater fan switch 54 Cables preset for fitting light guide cable lamp (air conditioned cars) 55 Cables preset for fitting a radio set (optional) 56 Heater fan motor 57 Glove compartment light switch 58 Radio set fuse holder 59 Glovebox light (3W, w/b) 60 Cigar lighter/light (3W, tubular) 61 Ashtray light (4W, tubular) 62 Ignition switch 63 Windscreen wiper/washer switch 64 Headlamp switch 65 Direction indicator switch 66 Horn control 67 Cables, preset for fitting a righthand loudspeaker (optional) 68 Door switches 69 Cable preset for fitting selector lever indicator (131 Mirafiori models 1600cm^3 fitted with automatic transmission) 70 Cable preset for fitting a starter/reverse gear inhibitor switch (131 Mirafiori models 1600cm^3 fitted with automatic transmission) 71 Handbrake on/signal switch 72 Reversing light switch 73 Stoplight switch 74 Connections preset for fitting an electric aerial 75 Cables preset for fitting lefthand loudspeaker (optional) 76 Rear interior lights/switches (4W, tubular) 77 Courtesy light/switch (5W, festoon) 78 Heated backlight 79 Fuel transmitter 80 Aerial lead 81 Cables preset for fitting an aerial motor 82 Stoplights (21W, spherical) 83 Number plate lights (5W, spherical) 84 Rear direction indicators (21W, spherical) 85 Reversing lights (21W, spherical) 86 Rear lights (5W, spherical) 87 Rear fog lights (21W, spherical)

w/l = Warning light
w/b = Wedge base

Cable colour code: **A** Light blue **B** White **C** Amber **G** Yellow **H** Grey **L** Blue **M** Brown **N** Black **R** Red **S** Pink **V** Green **Z** Mauve

HINTS ON MAINTENANCE AND OVERHAUL

There are few things more rewarding than the restoration of a vehicle's original peak of efficiency and smooth performance.

The following notes are intended to help the owner to reach that state of perfection. Providing that he possesses the basic manual skills he should have no difficulty in performing most of the operations detailed in this manual. It must be stressed, however, that where recommended in the manual, highly-skilled operations ought to be entrusted to experts, who have the necessary equipment, to carry out the work satisfactorily.

Quality of workmanship :

The hazardous driving conditions on the roads to-day demand that vehicles should be as nearly perfect, mechanically, as possible. It is therefore most important that amateur work be carried out with care, bearing in mind the often inadequate working conditions, and also the inferior tools which may have to be used. It is easy to counsel perfection in all things, and we recognise that it may be setting an impossibly high standard. We do, however, suggest that every care should be taken to ensure that a vehicle is as safe to take on the road as it is humanly possible to make it.

Safe working conditions :

Even though a vehicle may be stationary, it is still potentially dangerous if certain sensible precautions are not taken when working on it while it is supported on jacks or blocks. It is indeed preferable not to use jacks alone, but to supplement them with carefully placed blocks, so that there will be plenty of support if the car rolls off the jacks during a strenuous manoeuvre. Axle stands are an excellent way of providing a rigid base which is not readily disturbed. Piles of bricks are a dangerous substitute. Be careful not to get under heavy loads on lifting tackle, the load could fall. It is preferable not to work alone when lifting an engine, or when working underneath a vehicle which is supported well off the ground. To be trapped, particularly under the vehicle, may have unpleasant results if help is not quickly forthcoming. Make some provision, however humble, to deal with fires. Always disconnect a battery if there is a likelihood of electrical shorts. These may start a fire if there is leaking fuel about. This applies particularly to leads which can carry a heavy current, like those in the starter circuit. While on the subject of electricity, we must also stress the danger of using equipment which is run off the mains and which has no earth or has faulty wiring or connections. So many workshops have damp floors, and electrical shocks are of such a nature that it is sometimes impossible to let go of a live lead or piece of equipment due to the muscular spasms which take place.

Work demanding special care :

This involves the servicing of braking, steering and suspension systems. On the road, failure of the braking system may be disastrous. Make quite sure that there can be no possibility of failure through the bursting of rusty brake pipes or rotten hoses, nor to a sudden loss of pressure due to defective seals or valves.

Problems :

The chief problems which may face an operator are :

1 External dirt.
2 Difficulty in undoing tight fixings.
3 Dismantling unfamiliar mechanisms.
4 Deciding in what respect parts are defective.
5 Confusion about the correct order for reassembly.
6 Adjusting running clearance.
7 Road testing.
8 Final tuning.

Practical suggestions to solve the problems :

1 Preliminary cleaning of large parts – engines, transmissions, steering, suspensions, etc, – should be carried out before removal from the car. Where road dirt and mud alone are present, wash clean with a high-pressure water jet, brushing to remove stubborn adhesions, and allow to drain and dry. Where oil or grease is also present, wash down with a proprietary compound (Gunk, Teepol etc,) applying with a stiff brush – an old paint brush is suitable – into all crevices. Cover the distributor and ignition coils with a polythene bag and then apply a strong water jet to clear the loosened deposits. Allow to drain and dry. The assemblies will then be sufficiently clean to remove and transfer to the bench for the next stage.

On the bench, further cleaning can be carried out, first wiping the parts as free as possible from grease with old newspaper. Avoid using rag or cotton waste which can leave clogging fibres behind. Any remaining grease can be removed with a brush dipped in paraffin. Avoid using paraffin or petrol in large quantities for cleaning in enclosed areas, such as garages, on account of the high fire risk.

When all exteriors have been cleaned, and not before, dismantling can be commenced. This ensures that dirt will not enter into interiors and orifices revealed by dismantling. In the next phases, where components have to be cleaned, use a special solvent or petrol and keep the containers covered except when in use. After the components have been cleaned, plug small holes with tapered hard wood plugs cut to size and blank off larger orifices with greaseproof paper and masking tape. Do not use soft wood plugs or matchsticks as they may break.

2 It is not advisable to hammer on the end of a screw thread, but if it must be done, first screw on a nut to protect the thread, and use a lead hammer. This applies particularly to the removal of tapered cotters. Nuts and bolts seem to 'grow' together, especially in exhaust systems. If penetrating oil does not work, try the judicious application of heat, but be careful of starting a fire. Asbestos sheet or cloth is useful to isolate heat.

Tight bushes or pieces of tail-pipe rusted into a silencer can be removed by splitting them with an open-ended hacksaw. Tight screws can sometimes be started by a tap from a hammer on the end of a

suitable screwdriver. Many tight fittings will yield to the judicious use of a hammer, but it must be a soft-faced hammer, if damage is to be avoided, use a heavy block on the opposite side to absorb shock. Any parts of the steering system which have been damaged should be renewed, as attempts to repair them may lead to cracking and subsequent failure, and steering ball joints should be disconnected using a recommended tool to prevent damage.

3 It often happens that an owner is baffled when trying to dismantle an unfamiliar piece of equipment. So many modern devices are pressed together or assembled by spinning-over flanges, that they must be sawn apart. The intention is that the whole assembly must be renewed. However, parts which appear to be in one piece to the naked eye may reveal close-fitting joint lines when inspected with a magnifying glass, and this may provide the necessary clue to dismantling. Lefthanded screw threads are used where rotational forces would tend to unscrew a righthanded screw thread.

Be very careful when dismantling mechanisms which may come apart suddenly. Work in an enclosed space where the parts will be contained, and drape a piece of cloth over the device if springs are likely to fly in all directions. Mark everything which might be reassembled in the wrong position, scratched symbols may be used on unstressed parts, or a sequence of tiny dots from a centre punch can be useful. Stressed parts should never be scratched or centre-popped as this may lead to cracking under working conditions. Store parts which look alike in the correct order for reassembly. Never rely upon memory to assist in the assembly of complicated mechanisms, especially when they will be dismantled for a long time, but make notes, and drawings to supplement the diagrams in the manual, and put labels on detached wires. Rust stains may indicate unlubricated wear. This can sometimes be seen round the outside edge of a bearing cup in a universal joint. Look for bright rubbing marks on parts which normally should not make heavy contact. These might prove that something is bent or running out of truth. For example, there might be bright marks on one side of a piston, at the top near the ring grooves, and others at the bottom of the skirt on the other side. This could well be the clue to a bent connecting rod. Suspected cracks can be proved by heating the component in a light oil to approximately 100°C, removing, drying off, and dusting with french chalk. If a crack is present the oil retained in the crack will stain the french chalk.

4 In determining wear, and the degree, against the permissible limits set in the manual, accurate measurement can only be achieved by the use of a micrometer. In many cases, the wear is given to the fourth place of decimals; that is in ten-thousandths of an inch. This can be read by the vernier scale on the barrel of a good micrometer. Bore diameters are more difficult to determine. If, however, the matching shaft is accurately measured, the degree of play in the bore can be felt as a guide to its suitability. In other cases, the shank of a twist drill of known diameter is a handy check.

Many methods have been devised for determining the clearance between bearing surfaces. To-day the best and simplest is by the use of Plastigage, obtainable from most garages. A thin plastic thread is laid between the two surfaces and the bearing is tightened, flattening the thread. On removal, the width of the thread is compared with the scale supplied with the thread and the clearance is read off directly. Sometimes joint faces leak persistently, even after gasket renewal. The fault will then be traceable to distortion, dirt or burrs. Studs which are screwed into soft metal frequently raise burrs at the point of entry. A quick cure for this is to chamfer the edge of the hole in the part which fits over the stud.

5 **Always check a replacement part with the original one before it is fitted.**

If parts are not marked, and the order for reassembly is not known, a little detective work will help. Look for marks which are due to wear to see if they can be mated. Joint faces may not be identical due to manufacturing errors, and parts which overlap may be stained, giving a clue to the correct position. Most fixings leave identifying marks especially if they were painted over on assembly. It is then easier to decide whether a nut, for instance, has a plain, a spring, or a shakeproof washer under it. All running surfaces become 'bedded' together after long spells of work and tiny imperfections on one part will be found to have left corresponding marks on the other. This is particularly true of shafts and bearings and even a score on a cylinder wall will show on the piston.

6 Checking end float rocker clearances by feeler gauge may not always give accurate results because of wear. For instance, the rocker tip which bears on a valve stem may be deeply pitted, in which case the feeler will simply be bridging a depression. Thrust washers may also wear depressions in opposing faces to make accurate measurement difficult. End float is then easier to check by using a dial gauge. It is common practice to adjust end play in bearing assemblies, like front hubs with taper rollers, by doing up the axle nut until the hub becomes stiff to turn and then backing it off a little. Do not use this method with ballbearing hubs as the assembly is often preloaded by tightening the axle nut to its fullest extent. If the splitpin hole will not line up, file the base of the nut a little.

Steering assemblies often wear in the straight-ahead position. If any part is adjusted, make sure that it remains free when moved from lock to lock. Do not be surprised if an assembly like a steering gearbox, which is known to be carefully adjusted outside the car, becomes stiff when it is bolted into place. This will be due to distortion of the case by the pull of the mounting bolts, particularly if the mounting points are not all touching together. This problem may be met in other equipment and is cured by careful attention to the alignment of mounting points.

When a spanner is stamped with a size and A/F it means that the dimension is the width between the jaws and has no connection with ANF, which is the designation for the American National Fine thread. Coarse threads like Whitworth are rarely used on cars to-day except for studs which screw into soft

GLOSSARY OF TERMS

Allen key Cranked wrench of hexagonal section for use with socket head screws.

Alternator Electrical generator producing alternating current. Rectified to direct current for battery charging.

Ambient temperature Surrounding atmospheric temperature.

Annulus Used in engineering to indicate the outer ring gear of an epicyclic gear train.

Armature The shaft carrying the windings, which rotates in the magnetic field of a generator or starter motor. That part of a solenoid or relay which is activated by the magnetic field.

Axial In line with, or pertaining to, an axis.

Backlash Play in meshing gears.

Balance lever A bar where force applied at the centre is equally divided between connections at the ends.

Banjo axle Axle casing with large diameter housing for the crownwheel and differential.

Bendix pinion A self-engaging and self-disengaging drive on a starter motor shaft.

Bevel pinion A conical shaped gearwheel, designed to mesh with a similar gear with an axis usually at 90 deg. to its own.

bhp Brake horse power, measured on a dynamometer.

bmep Brake mean effective pressure. Average pressure on a piston during the working stroke.

Brake cylinder Cylinder with hydraulically operated piston(s) acting on brake shoes or pad(s).

Brake regulator Control valve fitted in hydraulic braking system which limits brake pressure to rear brakes during heavy braking to prevent rear wheel locking.

Camber Angle at which a wheel is tilted from the vertical.

Capacitor Modern term for an electrical condenser. Part of distributor assembly, connected across contact breaker points, acts as an interference suppressor.

Castellated Top face of a nut, slotted across the flats, to take a locking splitpin.

Castor Angle at which the kingpin or swivel pin is tilted when viewed from the side.

cc Cubic centimetres. Engine capacity is arrived at by multiplying the area of the bore in sq cm by the stroke in cm by the number of cylinders.

Clevis U-shaped forked connector used with a clevis pin, usually at handbrake connections.

Collet A type of collar, usually split and located in a groove in a shaft, and held in place by a retainer. The arrangement used to retain the spring(s) on a valve stem in most cases.

Commutator Rotating segmented current distributor between armature windings and brushes in generator or motor.

Compression ratio The ratio, or quantitative relation, of the total volume (piston at bottom of stroke) to the unswept volume (piston at top of stroke) in an engine cylinder.

Condenser See capacitor.

Core plug Plug for blanking off a manufacturing hole in a casting.

Crownwheel Large bevel gear in rear axle, driven by a bevel pinion attached to the propeller shaft. Sometimes called a 'ring gear .

'C'-spanner Like a 'C' with a handle. For use on screwed collars without flats, but with slots or holes.

Damper Modern term for shock-absorber, used in vehicle suspension systems to damp out spring oscillations.

Depression The lowering of atmospheric pressure as in the inlet manifold and carburetter.

Dowel Close tolerance pin, peg, tube, or bolt, which accurately locates mating parts.

Drag link Rod connecting steering box drop arm (pitman arm) to nearest front wheel steering arm in certain types of steering systems.

Dry liner Thinwall tube pressed into cylinder bore

Dry sump Lubrication system where all oil is scavenged from the sump, and returned to a separate tank.

Dynamo See Generator.

Electrode Terminal, part of an electrical component, such as the points or 'Electrodes' of a sparking plug.

Electrolyte In lead-acid car batteries a solution of sulphuric acid and distilled water.

End float The axial movement between associated parts, end play.

EP Extreme pressure. In lubricants, special grades for heavily loaded bearing surfaces, such as gear teeth in a gearbox, or crownwheel and pinion in a rear axle.

Fade Of brakes. Reduced efficiency due to overheating.

Field coils Windings on the polepieces of motors and generators.

Fillets Narrow finishing strips usually applied to interior bodywork.

First motion shaft Input shaft from clutch to gearbox.

Fullflow filter Filters in which all the oil is pumped to the engine. If the element becomes clogged, a bypass valve operates to pass unfiltered oil to the engine.

FWD Front wheel drive.

Gear pump Two meshing gears in a close fitting casing. Oil is carried from the inlet round the outside of both gears in the spaces between the gear teeth and casing to the outlet, the meshing gear teeth prevent oil passing back to the inlet, and the oil is forced through the outlet port.

Generator Modern term for 'Dynamo'. When rotated produces electrical current.

Grommet A ring of protective or sealing material. Can be used to protect pipes or leads passing through bulkheads.

Grubscrew Fully threaded headless screw with screwdriver slot. Used for locking, or alignment purposes.

Gudgeon pin Shaft which connects a piston to its connecting rod. Sometimes called 'wrist pin', or 'piston pin'.

Halfshaft One of a pair transmitting drive from the differential.

Helical In spiral form. The teeth of helical gears are cut at a spiral angle to the side faces of the gearwheel.

Hot spot Hot area that assists vapourisation of fuel on its way to cylinders. Often provided by close contact between inlet and exhaust manifolds.

HT High Tension. Applied to electrical current produced by the ignition coil for the sparking plugs.

Hydrometer A device for checking specific gravity of liquids. Used to check specific gravity of electrolyte.

Hypoid bevel gears A form of bevel gear used in the rear axle drive gears. The bevel pinion meshes below the centre line of the crownwheel, giving a lower propeller shaft line.

Idler A device for passing on movement. A free running gear between driving and driven gears. A lever transmitting track rod movement to a side rod in steering gear.

Impeller A centrifugal pumping element. Used in water pumps to stimulate flow.

Journals Those parts of a shaft that are in contact with the bearings.

Kingpin The main vertical pin which carries the front wheel spindle, and permits steering movement. May be called 'steering pin' or 'swivel pin'.

Layshaft The shaft which carries the laygear in the gearbox. The laygear is driven by the first motion shaft and drives the third motion shaft according to the gear selected. Sometimes called the 'countershaft' or 'second motion shaft.'

lb ft A measure of twist or torque. A pull of 10 lb at a radius of 1 ft is a torque of 10 lb ft.

lb/sq in Pounds per square inch.

Little-end The small, or piston end of a connecting rod. Sometimes called the 'small-end'.

LT Low Tension. The current output from the battery.

Mandrel Accurately manufactured bar or rod used for test or centring purposes.

Manifold A pipe, duct, or chamber, with several branches.

Needle rollers Bearing rollers with a length many times their diameter.

Oil bath Reservoir which lubricates parts by immersion. In air filters, a separate oil supply for wetting a wire mesh element to hold the dust.

Oil wetted In air filters, a wire mesh element lightly oiled to trap and hold airborne dust.

Overlap Period during which inlet and exhaust valves are open together.

Panhard rod Bar connected between fixed point on chassis and another on axle to control sideways movement.

Pawl Pivoted catch which engages in the teeth of a ratchet to permit movement in one direction only.

Peg spanner Tool with pegs, or pins, to engage in holes or slots in the part to be turned.

Pendant pedals Pedals with levers that are pivoted at the top end.

Phillips screwdriver A cross-point screwdriver for use with the cross-slotted heads of Phillips screws.

Pinion A small gear, usually in relation to another gear.

Piston-type damper Shock absorber in which damping is controlled by a piston working in a closed oil-filled cylinder.

Preloading Preset static pressure on ball or roller bearings not due to working loads.

Radial Radiating from a centre, like the spokes of a wheel.

Radius rod Pivoted arm confining movement of a part to an arc of fixed radius.

Ratchet Toothed wheel or rack which can move in one direction only, movement in the other being prevented by a pawl.

Ring gear A gear tooth ring attached to outer periphery of flywheel. Starter pinion engages with it during starting.

Runout Amount by which rotating part is out of true.

Semi-floating axle Outer end of rear axle halfshaft is carried on bearing inside axle casing. Wheel hub is secured to end of shaft.

Servo A hydraulic or pneumatic system for assisting, or, augmenting a physical effort. See 'Vacuum Servo'.

Setscrew One which is threaded for the full length of the shank.

Shackle A coupling link, used in the form of two parallel pins connected by side plates to secure the end of the master suspension spring and absorb the effects of deflection.

Shell bearing Thinwalled steel shell lined with anti-friction metal. Usually semi-circular and used in pairs for main and big-end bearings.

Shock absorber See 'Damper'.

Silentbloc Rubber bush bonded to inner and outer metal sleeves.

Socket-head screw Screw with hexagonal socket for an Allen key.

Solenoid A coil of wire creating a magnetic field when electric current passes through it. Used with a soft iron core to operate contacts or a mechanical device.

Spur gear A gear with teeth cut axially across the periphery.

Stub axle Short axle fixed at one end only.

Tachometer An instrument for accurate measurement of rotating speed. Usually indicates in revolutions per minute.

TDC Top Dead Centre. The highest point reached by a piston in a cylinder, with the crank and connecting rod in line.

Thermostat Automatic device for regulating temperature. Used in vehicle coolant systems to open a valve which restricts circulation at low temperature.

Third motion shaft Output shaft of gearbox.

Threequarter floating axle Outer end of rear axle halfshaft flanged and bolted to wheel hub, which runs on bearing mounted on outside of axle casing. Vehicle weight is not carried by the axle shaft.

Thrust bearing or washer Used to reduce friction in rotating parts subject to axial loads.

Torque Turning or twisting effort. See 'lb ft'.

Track rod The bar(s) across the vehicle which connect the steering arms and maintain the front wheels in their correct alignment.

UJ Universal joint. A coupling between shafts which permits angular movement.

UNF Unified National Fine screw thread.

Vacuum servo Device used in brake system, using difference between atmospheric pressure and inlet manifold depression to operate a piston which acts to augment brake pressure as required. See 'Servo'.

Venturi A restriction or 'choke' in a tube, as in a carburetter, used to increase velocity to obtain a reduction in pressure.

Vernier A sliding scale for obtaining fractional readings of the graduations of an adjacent scale.

Welch plug A domed thin metal disc which is partially flattened to lock in a recess. Used to plug core holes in castings.

Wet liner Removable cylinder barrel, sealed against coolant leakage, where the coolant is in direct contact with the outer surface.

Wet sump A reservoir attached to the crankcase to hold the lubricating oil.

NOTES

INDEX

A

Air cleaner maintenance 33
Air filter, servo, maintenance 114
Alternator description 118
Alternator precautions 118
Alternator removal and refitting 120
Alternator testing 118
Antifreeze solutions 51, 55
Automatic transmission description 77
Automatic transmission maintenance .. 78
Automatic transmission removal and refitting 83
Automatic transmission selector linkage .. 78
Auxiliary shaft 28
Axle assembly maintenance 85
Axle assembly removal 88

B

Ball joints removal and refitting 95, 99
Battery maintenance 117
Beam setting, headlamps 121
Belt tensioning 54, 130
Big-end bearings, servicing 27
Big-end removal and refitting 15, 31
Bleeding, brake system 114
Bodywork 123
Bonnet adjustment 127
Brake caliper description 106
Brake caliper servicing 108
Brake disc servicing 107
Brake drums 109
Brake faults 116
Brake maintenance 105
Brake master cylinder 113
Brake pads 106
Brake servo unit 114
Brake system description 105
Brake system regulator 111
Brushes, alternator 114
Brushes, starter motor 114

C

Caliper, brakes 108
Camber angle 98
Camshaft bearings 20
Camshaft drive belt 24
Camshaft drive belt tensioner 25
Camshaft removal 15, 18
Capacitor, distributor 45
Carburetter adjustment 35, 36, 37
Carburetter dismantling 38
Carburetter faults 41
Carburetter jets 38
Carburetter removal and refitting .. 38
Clutch adjustment 57
Clutch cable 58
Clutch description 57
Clutch faults 60
Clutch pressure plate 58
Clutch release bearing 58
Clutch removal and refitting 58
Cooling fan 53

D

Dampers, front suspension 96
Dampers, rear suspension 90
Decarbonising 20
Diaphragm, fuel pump 34
Disc brake pads 106
Disc brake removal and refitting 106
Distributor maintenance 43
Distributor removal and refitting 45
Distributor servicing 46
Door adjustment 125
Door glass removal and refitting 125
Door handles 125
Door locks 125
Door trim removal and refitting 124
Draining cooling system 51
Drive belt tensioning 54
Drive (propeller) shaft 86

E

Electrical faults 122
Electrical system 117
Electrolyte, battery 117
Engine description 9
Engine dismantling 14
Engine faults 31
Engine manifolds, inlet and exhaust .. 17, 18
Engine reassembly 31
Engine removal and refitting 11, 31

F

Final drive 85
Firing order 137
Flywheel removal 15
Front hub adjustment 93
Front hub removal and refitting 93, 95
Front springs 96
Front suspension description 91
Front suspension faults 98
Front wheel alignment 97, 103
Front wheel bearings 91
Fuel pump description 34
Fuel pump dismantling 34
Fuel pump removal 34
Fuel system faults 41
Fuses 121

G

Gasket, cylinder head 16, 17
Gearbox description 61
Gearbox dismantling 65, 67, 70, 72
Gearbox faults 74
Gearbox maintenance 61
Gearbox removal and refitting .. 62, 63, 65
Glossary of terms 155
Grinding valves 20
Gudgeon pins 27

H

Handbrake adjustment 116
Handbrake cables 115

Handbrake system description 105
Headlamp beam setting 121
Hints on maintenance and overhaul .. 152
Hub bearings, front 91
Hydraulic system, brakes 105
Hydrometer test of electrolyte 117

I
Idling adjustment 35, 36
Ignition coil 45
Ignition distributor 45
Ignition faults 44, 50
Ignition system 43
Ignition timing 47, 49

J
Jets, carburetter 38
Jets, sizes 136, 137
Journal bearings 27

L
Lighting system 122
Lock, door 125

M
Main bearing liners 27
Main bearing renewal 27
Manifold, inlet and exhaust 17, 18
Master cylinder, brakes 113

O
Oil filter servicing 30
Oil pressure relief valve 30
Oil pump 29
Oil seal, crankshaft 31
Overhaul, hints 152

P
Piston and connecting rod 27
Piston oversizes 133, 135
Piston removal and refitting 15, 31
Piston rings 27
Propeller shaft removal and refitting .. 86
Propeller shaft servicing 86

R
Radiator flushing 52
Radiator removal and refitting 52, 53
Rear axle description 85
Rear axle removal 88
Rear dampers 90
Rear springs 90
Rear suspension description 85
Rear suspension faults 90
Rebore, cylinders 27
Regulator, rear brake pressure 111
Remote control, door lock 125

S
Selector mechanism, automatic transmission 78
Servo unit, brakes 114
Shock absorber (see Damper)
Slow-running adjustment 35, 36
Solenoid, starter motor 120
Sparking plugs 48
Specific gravity, electrolyte 117
Sprockets, timing belt 25
Starter drive servicing 121
Starter motor armature 121
Starter motor brushes 120
Starter motor commutator 120
Starter motor testing 120
Static ignition timing 47
Steering faults 103
Steering column 100
Steering gear description 99
Steering gear removal and refitting .. 100
Steering servicing 101
Steering linkage 99
Steering wheel removal 100
Stroboscopic ignition timing 47
Sump removal 15
Suspension, front 91
Suspension, rear 85

T
Tappet removal 15, 19
Technical data 133
Thermostat removal and refitting .. 55
Thermostat testing 55
Timing belt removal and refitting .. 24
Timing belt tensioner 25
Timing marks, ignition 47, 49
Timing marks, sprockets 25
Toe-in, adjustment 103
Torque converter 77, 78
Torque wrench settings 140
Transmission servicing, automatic .. 77
Transmission servicing, synchromesh 65, 67, 70, 72
Trim removal and refitting 124

U
Universal joints servicing 86

V
Vacuum servo, brakes 114
Valve clearance adjustment 22

W
Water pump 54
Wiring diagrams 143